1968 BUICK SKYLARK

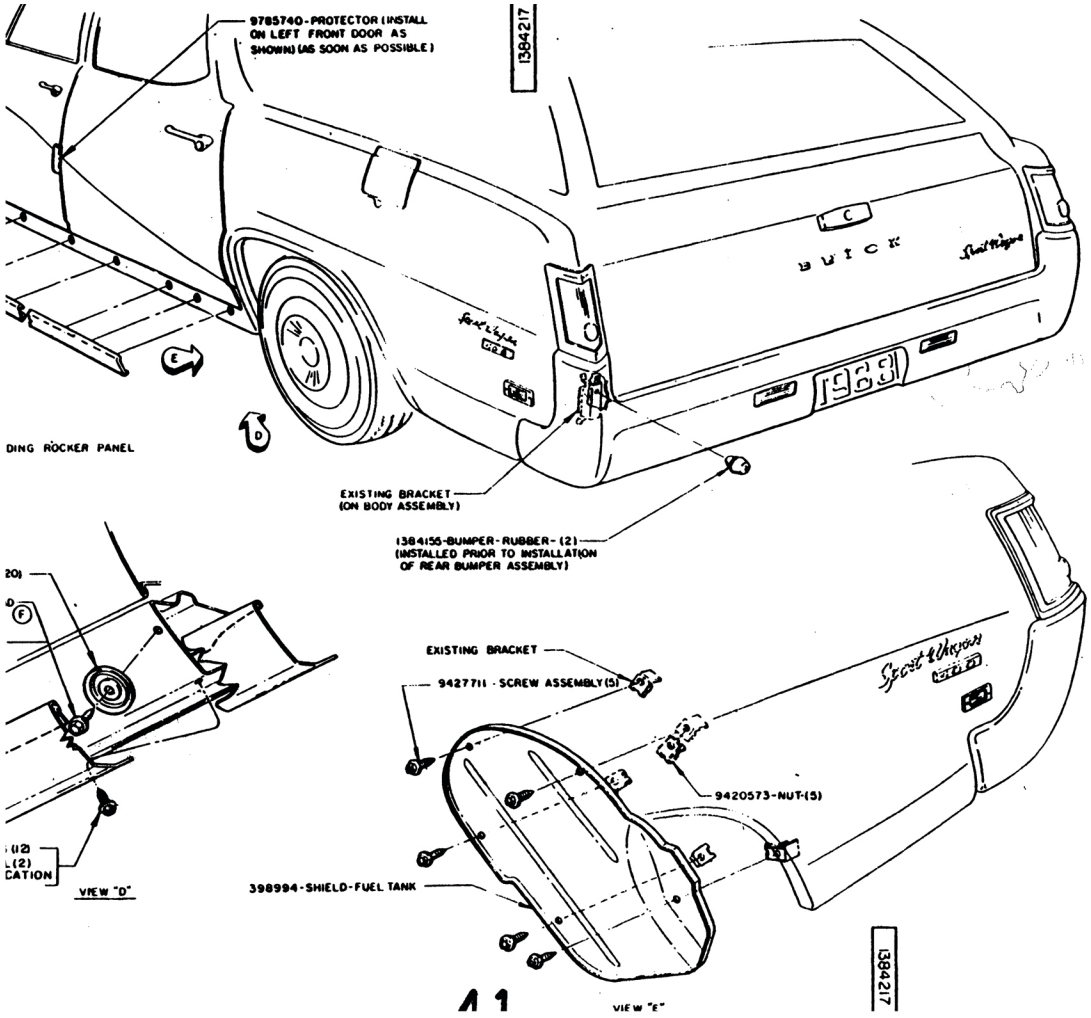

FACTORY ASSEMBLY INSTRUCTION MANUAL

PREFACE

The purpose of this manual is to furnish the assembly plants with the necessary engineering information and illustration to assemble and ship a complete Buick vehicle to comply with Engineering specifications and quality standards. (Except special order).

The manual consists of fourteen (14) divided sections as follows:

Sections

0. General Information.
1. Body - Instrument Panel - Air Conditioning & Heater
2. Frames - Chassis Painting & Body Mounting.
3. Suspension - Front & Wheel Alignment.
4. Suspensions - Rear.
5. Brakes - Lines & Test Procedure.
6. Engines - Throttle Controls & Power Plant Mounting to Frame.
7 Transmissions and Lower Controls.
8. Fuel and Exhaust Systems.
9. Steering - Linkage Upper Column Shift, Transmission Controls & Column Installation.
10. Wheel and Tires - Balancing and Car Jack.

*1-13-67

PART NUMBER- 1383770

PAGE NUMBER

DAVE GRAHAM INC. - 2015
ALL RIGHTS RESERVED

11. Hood - Fenders - Radiator Grille & Front End Sheet Metal.

12. Electrical - Wiring Information and Radios.

13. Omitted - See Section 11.

14. Bumpers.

Pages are numbered in the lower right corner title block to aid in filing.

For example, Page 0-1.0 will be filed the first page in Section "0" - Page 1-1.0 indicates Page 1 of Section 1. The page 2-1.0 indicates Section 2 Page 1, etc.

NOTE: When there is a conflict in the information the latest date of Buick Engineering Official Information will supersede.

To obtain the maximum benefit from the manual, it is imperative that revised and additional pages be filed in the proper section when received, and obsolete pages destroyed.

*1-13-67
PART NUMBER 1383770
PAGE NUMBER

DAVE GRAHAM INC. - 2015
ALL RIGHTS RESERVED

1968 BUICK ASSEMBLY INSTRUCTION MANUAL

SPECIAL - SKYLARK 43000 - 44000 SERIES

GENERAL INFORMATION (SECTION "0") INDEX SHEET

	PAGES
Car Model Chart	0-1.1
Audit Torque Requirements (4 pages)	0-1.2 thru 0-1.5
Paint Car Exterior Colors	0-2.1
Paint Car Interior Requirements - All Chart - Car Color Interior	0-3.1 0-3.2 0-3.3
Car Appearance - Dimensional & Trim Height - Chart	0-4.1
Car-Loading Dimensional Chart	0-5.1
Heater Hose Usage Chart (See 1-9.1 for installation)	0-6.1
Items to be placed in the I.P. Compt. & Car Keys Information	0-8.1
Trans. Oil Fill Procedure & Roll Test (4 pages)	0-9.1 thru 0-9.4
Black-Light Inspection for Leak (2 pages)	0-10.1 0-10.2
Assembly Repairable Items (3 pages)	0-11.1 thru 0-11.3
Buick Accessory & Option Code (4 pages)	0-12.1 thru 0-12.4
Vehicle Identification Number Stamping Information	0-13.1
Engine Oil Change Label Installation All	0-14.1

Revised 11-14-67

PART NUMBER- 1383776

PAGE NUMBER- 0 1 0

ng

DAVE GRAHAM INC. - 2015
ALL RIGHTS RESERVED

1968 BUICK MODEL CHART - "A" SERIES

SERIES	W.B.	BODY STYLE	MODEL L6	MODEL V8	DISCP. & CARB. L6 OR V8	TRANSMISSION AND 3 SP MANUAL
SPECIAL DELUXE	112	2-DR COUPE TP	43327		250 1-BBL	
	116	4-DR SEDAN TP	69			
		4-DR 2-SEAT WAGON		43435	350 2-BBL	
GS 350	112	2-DR COUPE HARDTOP		43437	350 4-BBL	
SKYLARK	112	2-DR COUPE HARDTOP	43537		250 1-BBL	
	116	4-DR SEDAN TP	69			
SKYLARK CUSTOM	112	2-DR COUPE HARDTOP		44437	350 2-BBL	
		2-DR CONVERTIBLE		67		
	116	4-DR HARDTOP		39		
		4-DR SEDAN TP		69		
SPORT WAGON	121	4-DR 2-SEAT WAGON		44455	350 2-BBL	3 SP MAN.
		4-DR 3-SEAT WAGON		65		
SPT. WGN. WD. GRAIN		4 DR 2-SEAT WAGON		44855		
		4 DR 3-SEAT WAGON		65		
C.S. 400	112	2 DR COUPE HARDTOP		44637	400 4 BBL	3 SP. MAN
		2 DR CONVERTIBLE		67		

NOTE: Sportwagons assembled at Flint only, all other Series at Chevrolet *3-20-67
Baltimore, Chevrolet Kansas City, GMAD *Fremont, [illegible] and Flint
home plant A Series built in Canadian Plants (Specific models only)

DAVE GRAHAM INC. - 2015
ALL RIGHTS RESERVED

AUDIT TORQUE - SPECIFICATIONS

AUDIT TORQUE:

This torque applies to the finished product and will be specified where a change in torque takes place after the car has been driven up to 40 miles If Audit Torque is not specifically called out then the min specified Assembly Checking Torque applies to Audit checking as well. Assembly Torque requirements are shown on Installation Drawings in this manual.

NOTE:

Engineering can assure product reliability only when Assembly Checking Torques are maintained. Audit Torque is in no way intended to relax or affect Assembly Checking Torque.

For further information on torque in general, see the booklet, "Buick Torque Information for Assembly Plants."

DAVE GRAHAM INC. - 2015
ALL RIGHTS RESERVED

AUDIT TORQUE - SPECIFICATIONS

BODY MOUNTING

All Bolts - 25 lb-ft. min.

FRONT SUSPENSIONS

Control Arm to Shaft Bolt -
35 lb-ft. min.
Upper Control Arm Shaft to Frame Nut -
35 lb-ft. min.
Lower Control Arm to Frame Nut
60 lb-ft. min.
Upper Control Arm to Knuckle Nut -
30 lb-ft. min.
Lower Control Arm to Knuckle Nut
55 lb-ft. min.

REAR SUSPENSION

All control Arm to Frame or Axle Nuts -
60 lb-ft. min.
Prop. Shaft to Comp. Flange -
10-20 lb-ft.
*Axle Cover Bolt - 20 lb-ft. min.

FRONT BRAKES (STANDARD)

Anchor Bolt - 75 lb-ft. min.
Back Plt. to Knuckle and Arm Nut -
70 lb-ft. min.

FRONT BRAKES (DISC)

Shield to Knuckle - 100 lb-ft. min.
Shield to Knuckle & Arm - 70 lb-ft. min
Shield to Caliper - 55 lb-ft. min

REAR BRAKES

Back Plt. to Axle 25 lb-ft. min

BRAKE ACTUATING MECHANISM

Master Cylinder to Dash
15 lb-ft. min.
Power Cylinder to Dash
15 lb-ft. min.

GAS TANK

Tank Strap Nuts 60 lb-ft. min.
Tank Support to Frame 15 lb-ft. min.
(Wagon Only).

DAVE GRAHAM INC. - 2015
ALL RIGHTS RESERVED

AUDIT TORQUE - SPECIFICATIONS

STEERING

Strg. Shft. Pinch Bolt 20 lb-ft. min.
Strg. Gear to Frm Bolt 45 lb-ft. min.
Rag Joint Nut 10 lb-ft. min.
Idler Arm to Frm Nut 30 lb-ft. min.
Pitman Arm to Gear Nut 100 lb-ft. min.
Tie Rod Clamp Nut 10 lb-ft. min.
P.S. Pump Pulley Nut 35 lb-ft. min.
Strg. Wheel Nut 25 lb-ft. min.
Tie Rod to Strg Arm Nut 25 lb-ft. min.
Bracket Asm to Instrument Panel &
Brake Bracket 12-28 lb-ft.

WHEELS

Standard Wheel Nut 45 lb-ft. min.
Chrome Wheel Nut 55 lb-ft. min.

HOOD

Hood Latch Screw 12 lb-ft. min.

DAVE GRAHAM INC. - 2015
ALL RIGHTS RESERVED

AUDIT BELT TENSION SPECIFICATIONS

GENERAL INFORMATION

Since belt tension does decay from the initial assembly tension, the following tabulation of belt tension is published to be used as a guide when taking new car audits.

Initial belt tension decay is a function of the following factors and hence very difficult to predict:

1. Length and type of operation.
2. Belt section and construction.
3. Initial tension.
4. Accessory loads.
5. Drive geometry.

Audit tension may vary from a 30-50% loss over the initial tension depending on the above.

*See Page 6-12.1 For Initial Tension (At Asm)	Minimum (Below which drive will not function properly)	Maximum (Above which damage can be done)	Desired Design Tension
Delcotron	50	140	65
Power Strg.	70	150	90
Air Conditioning	75	140	90
Air Pump	45	95	60

Engineering can assure product reliability only when assembly checking tensions are maintained. Audit tension is in no way intended to relax or affect initial tension or assembly checking tension.

*2-13-67

PART NUMBER- 1383770
PAGE NUMBER- 0-15

DAVE GRAHAM INC. - 2015
ALL RIGHTS RESERVED

1385152

CODE	PAINT COLOR	BODY PAINT COLOR IDENTIFICATION CODE (ACRYLIC LACQUER)	STD. WHEEL COLOR IDENTIFICATION CODE WITHOUT WHEEL COVERS (ENAMEL)	STD. WHEEL COLOR IDENTIFICATION CODE WITH WHEEL COVERS (ENAMEL)	SERIES USED ON
A	BLACK	WA 848	WE 848	WE 848	A,B,C,E
B	MIDNIGHT TEAL METALLIC	WA 3815	WE 3815	WE 848	E
C	WHITE	WA 2661	WE 848	WE 848	A,B,C,E
D	BLUE METALLIC	WA 3700	WE 3700	WE 848	A,B,C,
E	DARK BLUE METALLIC	WA 3760	WE 3760	WE 848	A,B,C,
F	TEAL METALLIC	WA 3762	WE 3762	WE 848	A,B,C,E
G	IVORY GOLD METALLIC	WA 3720	WE 3720	WE 848	A,B,C,E
K	TURQUOISE METALLIC	WA 3761	WE 3761	WE 848	A,B,C,E
L	DARK TEAL METALLIC	WA 3708	WE 3708	WE 848	A,B,C,E
M	BUCKSKIN METALLIC	WA 3819	WE 3819	WE 848	A,B,C,E
N	MAROON METALLIC	WA 3821	WE 3821	WE 848	A,B,C,E
P	SILVER GREEN METALLIC	WA 3726	WE 3726	WE 848	A,B,C,
R	RED	WA 3804	WE 3804	WE 848	A,B,C,E
S	DARK GREEN GOLD METALLIC	WA 3826	WE 3826	WE 848	E
T	IVORY	WA 3719	WE 848	WE 848	A,B,C,
U	~~DARK BROWN METALLIC~~	~~WA 3846~~	~~WE 3846~~	~~WE 848~~	~~E~~
V	DARK GRAY GREEN METALLIC	WA 3730	WE 3730	WE 848	A,B,C,E
W	SILVER BEIGE METALLIC	WA 3816	WE 3816	WE 848	E
X	BUCKSKIN	WA 3747	WE 3747	WE 848	E
Y	YELLOW	WA 3313	WE 3313	WE 848	A,B,C,
Z	SILVER METALLIC	WA 3796	WE 3796	WE 848	E

DATE	SYM	REVISION RECORD	AUTH	DR	CK
		REMOVED			

ALPHABET CODE LETTERS DESIGNATE COLORS WHICH ARE AVAILABLE IN ACRYLIC LACQUER EXTERIOR FINISH PAINTS FOR MODELS IN SOLID OR TWO TONE COMBINATIONS

PAINT IDENTIFICATION CODE NUMBERS ASSIGNED BY FISHER BODY

DO NOT SCALE — REPORT ERRORS
TOLERANCES UNLESS OTHERWISE SPECIFIED
. ALLOWED ON TWO PLACE DECIMALS
.000 ALLOWED ON THREE PLACE DECIMALS
COMMERCIAL TOLERANCES APPLY TO STANDARD PARTS - ROLLED SECTIONS SHEET METAL GAGES DRILLED AND PUNCHED HOLES
DEBUR ALL DRILLED HOLES COUNTERSINK ALL TAPPED HOLES (UNLESS)

ENG DATE 3-8-67	SCALE	DR PAM
FIRST USED 1968 ALL		CK
REFERENCE		APPR
		APPR
		APPR
MATERIAL SPEC		

NAME: CODE EXTERIOR CAR COLOR

PART NO. [illegible] PAGE NO. 0-21

DAVE GRAHAM INC. - 2015
ALL RIGHTS RESERVED

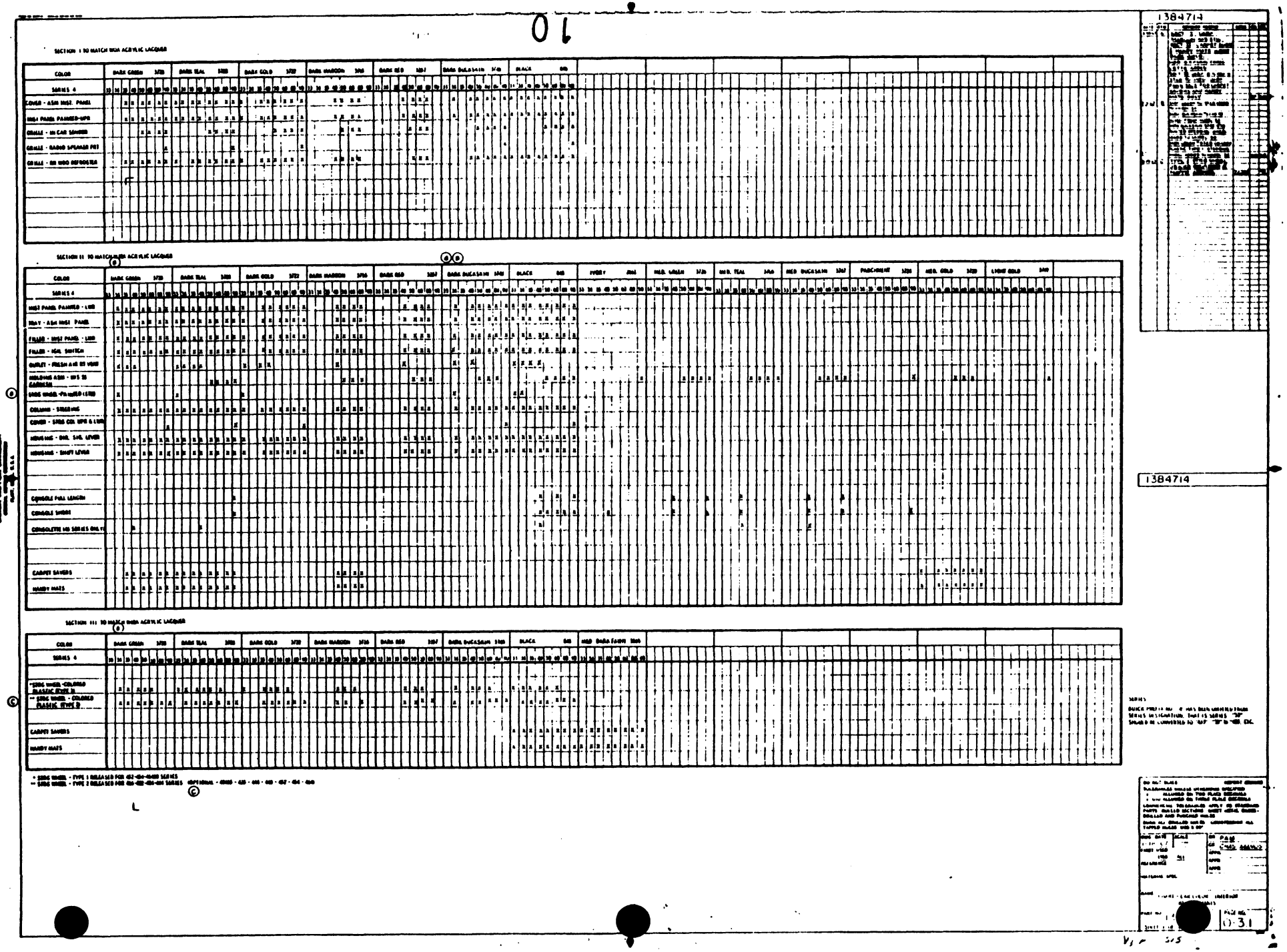

DAVE GRAHAM INC. - 2015
ALL RIGHTS RESERVED

GREEN (PLATINUM)		TEAL (BLUE)		GOLD (CHAMPAGNE)		PARCHMENT		BUCKSKIN		RED	
Comb No.	Model	Comb No.	Model	Comb No.	Model	Comb No.	Model	Comb No.	Model	Comb No.	Model
120	43569	101	43369	103	43327-69	114	43435	113	43435	107	44467
140	44439	111	43537-69, 43435	123	43569	114	43537-69	163	44439-67	127	444-44855-65
160	435-44437	121	43569	133	44437-69	194	43327	173	444-44637	117	43569 (Export)
160	44467	131	44437-69	143	44439	114	43437	183	444-44855-65		
170	444-44637	141	44439			114	43369	193	43437		
180	444-44855-65	151	43537					163	435-44437		
170	43437	161	44437-67								
		171	444-44637-67								
		181	444-44855-65								
		191	43327								
		111-171	43437								
		111	43369								

GLOSS	PART DESCRIPTION	COLOR	FISHER CODE	COLOR	FISHER CODE	COLOR	FISHER CODE	COLOR	FISHER CODE	COLOR	FISHER CODE	COLOR	FISHER CODE	Line No.
WOA	Cover Asm - Inst Pnl Padded	Dark Green	3728	Dark Teal	3708	Dark Gold	3722	Black	848	Dark Buckskin	3748	Dark Red	3357	1
WOA	Grille - Rr Wdo Defroster	Dark Green	3728	Dark Teal	3708	Dark Gold	3722	Black	848	Dark Buckskin	3748	Dark Red	3357	2
WOA	Grille - Rr Spkr Pkg Shelf	Dark Green	3728	Dark Teal	3708	Dark Gold	3722	Black	848	Dark Buckskin	3748	Dark Red	3357	3
WOA	Inst Panel Painted Upper	Dark Green	3728	Dark Teal	3708	Dark Gold	3722	Black	848	Dark Buckskin	3748	Dark Red	3357	4
														5
														6
														7
														8
W30A	Inst Panel Painted Lower	Dark Green	3728	Dark Teal	3708	Dark Gold	3722	Black	848	Dark Buckskin	3748	Dark Red	3357	9
W30A	Tray Asm-Ash Lower Inst Pnl	Dark Green	3728	Dark Teal	3708	Dark Gold	3722	Black	848	Dark Buckskin	3748	Dark Red	3357	10
W30A	Filler - Inst Pnl - Lower	Dark Green	3728	Dark Teal	3708	Dark Gold	3722	Black	848	Dark Buckskin	3748	Dark Red	3357	11
W30A	Filler - Ign Switch	Dark Green	3728	Dark Teal	3708	Dark Gold	3722	Black	848	Dark Buckskin	3748	Dark Red	3357	12
W30A	Cover - Strg Col Upper & Lower	Dark Green	3728	Dark Teal	3708	Dark Gold	3722	Black	848	Dark Buckskin	3748	Dark Red	3357	13
W30A	Column - Steering	Dark Green	3728	Dark Teal	3708	Dark Gold	3722	Black	848	Dark Buckskin	3748	Dark Red	3357	14
W30A	Housing - Shift Lever	Dark Green	3728	Dark Teal	3708	Dark Gold	3722	Black	848	Dark Buckskin	3748	Dark Red	3357	15
W30A	Housing - Dir Signal Lever	Dark Green	3728	Dark Teal	3708	Dark Gold	3722	Black	848	Dark Buckskin	3748	Dark Red	3357	16
W30A	Grille - RR Spkr Wagon	Med. Green	3726	Med. Teal	3706			Parch-ment	3724	Med. Buckskin	3747	Dark Red	3357	17
W30A	Housing - A/C Outlet, Rt Side	Dark Green	3728	Dark Teal	3708	Dark Gold	3722	Black	848	Dark Buckskin	3748	Dark Red	3357	18
W30A	Console - Long	Med. Green	3726	Med. Teal	3706					Med. Buckskin	3747			19
W30A	Console - Short	Med. Green	3726	Med. Teal	3706					Med. Buckskin	3747			20
W30A	Consolette	Dark Green	3728	Dark Teal	3708					Med. Buckskin	3747			21
														22
														23
														24
W30A	Steering Wheel Painted	Dark Green	3728	Dark Teal	3708	Dark Gold	3722	Black	848	Dark Buckskin	3748			25
W80A	Steering Wheel Deluxe or Custom	Dark Green	3728	Dark Teal	3708	Dark Gold	3722	Black	848	Dark Buckskin	3748	Dark Red	3357	26
														27
														28
W30A	Carpet Savers	Dark Green	3728	Dark Teal	3708	Med. Gold	3720					Dark Maroon	3716	29
W30A	Handy Mats	Dark Green	3726	Dark Teal	3708	Med. Gold	3720					Dark Maroon	3716	30
														31
														32
W80A	Carpet Savers							Black	848	Med. Dk. Fawn	3363			33
W80A	Handy Mats							Black	848	Med. Dk. Fawn	3363			34
														35
														36

NOTE: LINES 19-20 RELEASED FOR USE WITH BUCKET SEATS ONLY.

DATE	STA	REVISION RECORD	AUTHOR	DR	CK
2-23-67	A	Lines 29 & 30 were			
3-30-67	B	Dark Gold 3722 Buckskin Columns: Lines 29 & 30 Deleted; Lines 33 & 34 Added. Lines 21-24		PP	CM
5-19-67	J	"OR CUSTOM" ADDED (LINE 26) 72292		PP	CM
5-22-67	C	Comb: 111, 114, 178-171 and 173 added for 43437.		MJ	CM
6-22-67	D	Line 25 "Dark Green 3728 & Dark Brickskin 3748 added"		PP	CM
7-20-67	E	LIGHT TO DARK BUCKSKIN 1747 TO 3748: LINE 26.		DG	CM
9-11-67	F	PAGE NO. (WAS 0-3.4)		BB	CM
8-18-67	G	Comb. 111-114 added to 43369		MJ	CM
9-6-67	H	Comb. 163 Added for 44439		PP	CM
10-16-67	K	Comb. 183 added for 435-44437 (BUCKSKIN COLOR)		MJ	CM

DWG. DATE	1-18-67
SCALE	
DR.	P. Piamondon
CK.	
FIRST USED	1968-A
APPR.	
REFERENCE	
APPR.	
APPR.	
MATERIAL SPEC	
NAME	CHART - CAR COLOR INTERIOR
PART NO.	1384714
PAGE NO.	0-3.2
SHEET 2 OF 7 SHEETS	

DAVE GRAHAM INC. - 2015
ALL RIGHTS RESERVED

MAROON		IVORY (White)		BLACK	
Comb No.	Model	Comb No.	Model	Comb No.	Model
137	44469	152	44637	108	43327-69
147	44439	152	444-44667	118	43537-69
		162	43537	128	43569
		162	44437-39	138	44437-69
		172	444-44637-67	158	444-44667
		172	43437	158	44469
				158	44637
		152	44469	168	43537
				168	44437-39
				178	444-44637-67
				198	43327
				118-178	43437
				118	43369
				188	444-44855-65

GLOSS	PART DESCRIPTION	COLOR	FISHER CODE	COLOR	FISHER CODE	COLOR	FISHER CODE	Line No.
WOA	Cover Asm Inst Pnl Padded	Dark Maroon	3715	Black	848	Black	848	1
WOA	Grille - Rr Wdo Defroster	Dark Maroon	3715	Black	848	Black	848	2
WOA	Grille - RR Spkr Pkg Shelf	Dark Maroon	3715	Black	848	Black	848	3
WOA	Inst Panel Painted Upper	Dark Maroon	3715	Black	848	Black	848	4
								5
								6
								7
								8
W3OA	Inst Panel Painted Lower	Dark Maroon	3716	Black	848	Black	848	9
W3OA	Tray Asm - Ash Lower Inst Pnl	Dark Maroon	3716	Black	848	Black	848	10
W3OA	Filler - Inst Pnl Lower	Dark Maroon	3716	Black	848	Black	848	11
W3OA	Filler - Ign Switch	Dark Maroon	3716	Black	848	Black	848	12
W3OA	Cover-Strg Col Upper & Lower	Dark Maroon	3716	Black	848	Black	848	13
W3OA	Column - Steering	Dark Maroon	3716	Black	848	Black	848	14
W3OA	Housing - Shift Lever	Dark Maroon	3716	Black	848	Black	848	15
W3OA	Housing - Dir Signal Lever	Dark Maroon	3716	Black	848	Black	848	16
W3OA	Grille - RR Spkr Wagon							17
W3OA	Housing - A/C Outlet, Rt Si	Dark Maroon	3716	Black	848	Black	848	18
W3OA	Console - Long			Black	848	Black	848	19
W3OA	Console - Short			Ivory	2661	Black	848	20
W3OA	Consolette			Black	848	Black	848	21
								22
								23
								24
W3OA	Steering Wheel Painted					Black	848	25
W6OA	Steering Wheel Deluxe or Custom	Dark Maroon	3716	Black	848	Black	848	26
								27
								28
W3OA	Carpet Savers	Dark Maroon	3716					29
W3OA	Handy Mats	Dark Maroon	3716					30
								31
								32
W6OA	Carpet Savers			Black	848	Black	848	33
W6OA	Handy Mats			Black	848	Black	848	34
								35
								36

NOTE: LINES 19-20-21 ARE RELEASED FOR USE WITH BUCKET SEATS ONLY.

DATE	SYM	REVISION RECORD	AUTHOR	DR	CK
2-21-67	A	Maroon Column-Lines 1 thru 4. Spec. chgd from 3716 to 3715		PP	
5-22-67	B	Comb. 118, 172 and 178 Added for 43437; Comb. 198 deleted for 43437.		MJ	CM
8-17-67	C	Comb. 118 added for 43369		MJ	CM
8-6-67	D	Comb. 152 Added for 44469. Comb. 188 Added for 444-44855-65		PP	CM
9-19-67	E	"OR CUSTOM" ADDED (LINE 26).	72292		

DWG. DATE 1-18-67 | SCALE | DR. P. Plamondon | CK. | APPR. | APPR. | APPR.

FIRST USED 1968-A

REFERENCE

MATERIAL SPEC

NAME CHART - CAR COLOR INTERIOR

PART NO. 1384714 SHEET 3 OF 7 SHEETS | PAGE NO 0-3.3

V3 P3 S15

1384714-13-01

DAVE GRAHAM INC. - 2015
ALL RIGHTS RESERVED

GREEN PLATINUM		TEAL BLUE		GOLD CHAMPAGNE		PARCHMENT		BUCKSKIN		RED	
Comb No.	Model	Comb No.	Model	Comb No.	Model	Comb No.	Model	Comb No.	Model	Comb No.	Model
120	43559	101	43309	02	43317	111	43335	113	43325	117	44407
140	44439	111	43309-09			111	43527-09	113	43527	137	444-44455-65
160	435-44437	12	435-09	33	43317	04	43317	113	444-44437	117	435 w/ Export
180	444--	121	44437-09	43	44439	4	2-27	143	444-44455-65		
120	444-44437	141	44439					172	43527		
180	444-44455-65	161	43527								
120	4343	101	44437-09								
		171	444-44437-67								
		181	444-44455-65								
		191	43327								
		111-09	43437								

GLOSS	PART DESCRIPTION	COLOR	FISHER CODE	COLOR	FISHER CODE	COLOR	FISHER CODE	COLOR	FISHER CODE	COLOR	FISHER CODE	COLOR	FISHER CODE	Line No.
WOA	Cover Asm - Inst Pnl Padded	Dark Green	3728	Dark Teal	3708	Dark Gold	3722	Black	448	Dark Buckskin	3748	Dark Red	3357	1
WOA	Grille - Rr Wdo Defroster	Dark Green	3728	Dark Teal	3708	Dark Gold	3722	Black	448	Dark Buckskin	3748	Dark Red	3357	2
WOA	Grille - Rr Sdkr Pkg Shelf	Dark Green	3728	Dark Teal	3708	Dark Gold	3722	Black	448	Dark Buckskin	3748	Dark Red	3357	3
WOA	Inst Panel Painted Upper	Dark Green	3728	Dark Teal	3708	Dark Gold	3722	Black	448	Dark Buckskin	3748	Dark Red	3357	4
														5
														6
														7
														8
W30A	Inst Panel Painted Lower	Dark Green	3728	Dark Teal	3708	Dark Gold	3722	Black	448	Dark Buckskin	3748	Dark Red	3357	9
W30A	Trim Asm Ash Lower Inst Pn	Dark Green	3728	Dark Teal	3708	Dark Gold	3722	Black	448	Dark Buckskin	3748	Dark Red	3357	10
W30A	Filler - Inst Pnl Lower	Dark Green	3728	Dark Teal	3708	Dark Gold	3722	Black	448	Dark Buckskin	3748	Dark Red	3357	11
W30A	Filler - Ign Switch	Dark Green	3728	Dark Teal	3708	Dark Gold	3722	Black	448	Dark Buckskin	3748	Dark Red	3357	12
W30A	Cover - Strg Col Upper & Lower	Dark Green	3728	Dark Teal	3708	Dark Gold	3722	Black	448	Dark Buckskin	3748	Dark Red	3357	13
W30A	Column - Steering	Dark Green	3728	Dark Teal	3708	Dark Gold	3722	Black	448	Dark Buckskin	3748	Dark Red	3357	14
W30A	Housing - Shift Lever	Dark Green	3728	Dark Teal	3708	Dark Gold	3722	Black	448	Dark Buckskin	3748	Dark Red	3357	15
W30A	Housing - Dr Shift Lever	Dark Green	3728	Dark Teal	3708	Dark Gold	3722	Black	448	Dark Buckskin	3748	Dark Red	3357	16
W30A	Grille - RR Side wagon	Med. Green	3729	Med. Teal	3709			Parch-ment	3724	Med. Buckskin	3747	Dark Red	3357	17
W30A	Housing - A C Outlet, Rt Side	Dark Green	3728	Dark Teal	3708	Dark Gold	3722	Black	448	Dark Buckskin		Dark Red	3357	18
		Med. Green		Med. Teal						Med. Buckskin				19
		Med. Green		Med. Teal						Med. Buckskin	3747			20
W30A	Consolette	Dark Green	3729	Dark Teal	3709					Med. Buckskin	3747			21
														22
														23
														24
W30A	Steering Wheel Painted	Dark Green	3728	Dark Teal	3708	Dark Gold	3722	Black	448	Dark Buckskin	3748			25
W60A	Steering Wheel Deluxe	Dark Green	3728	Dark Teal	3708	Dark Gold	3722	Black	448	Dark Buckskin	3748	Dark Red	3357	26
														27
														28
W30A	Carpet Savers	Dark Green	3728	Dark Teal	3708	Med. Gold	3720					Dark Maroon	3716	29
W30A	Hand. Mats	Dark Green	3728	Dark Teal	3708	Med. Gold	3720					Dark Maroon	3716	30
														31
														32
W60A	Carpet Savers							Black	448	Med. Dk. Fawn	3749			33
W60A	Handy Mats							Black	448	Med. Dk. Fawn	3749			34
														35
														36

NOTE LINES 19-20 RELEASED FOR USE IN BUCKET SEATS ONLY

DATE	SYM	REVISION RECORD	AUTHOR	DR	CK
	A	Lines 19 & 20 were: Dark Gold 3722		PPL	

DWG. DATE 1-18-67	SCALE
FIRST USED 1968-A	DR. P. Plamondon
REFERENCE	CK.
	APPR.
	APPR.
	APPR.
MATERIAL SPEC	
NAME CHART - CAR COLOR INTERIOR	
PART NO. 1384714 SHEET 2 OF 7 SHEETS	PAGE NO. 0-3.4

13 PL 515

1384714

DAVE GRAHAM INC. - 2015
ALL RIGHTS RESERVED

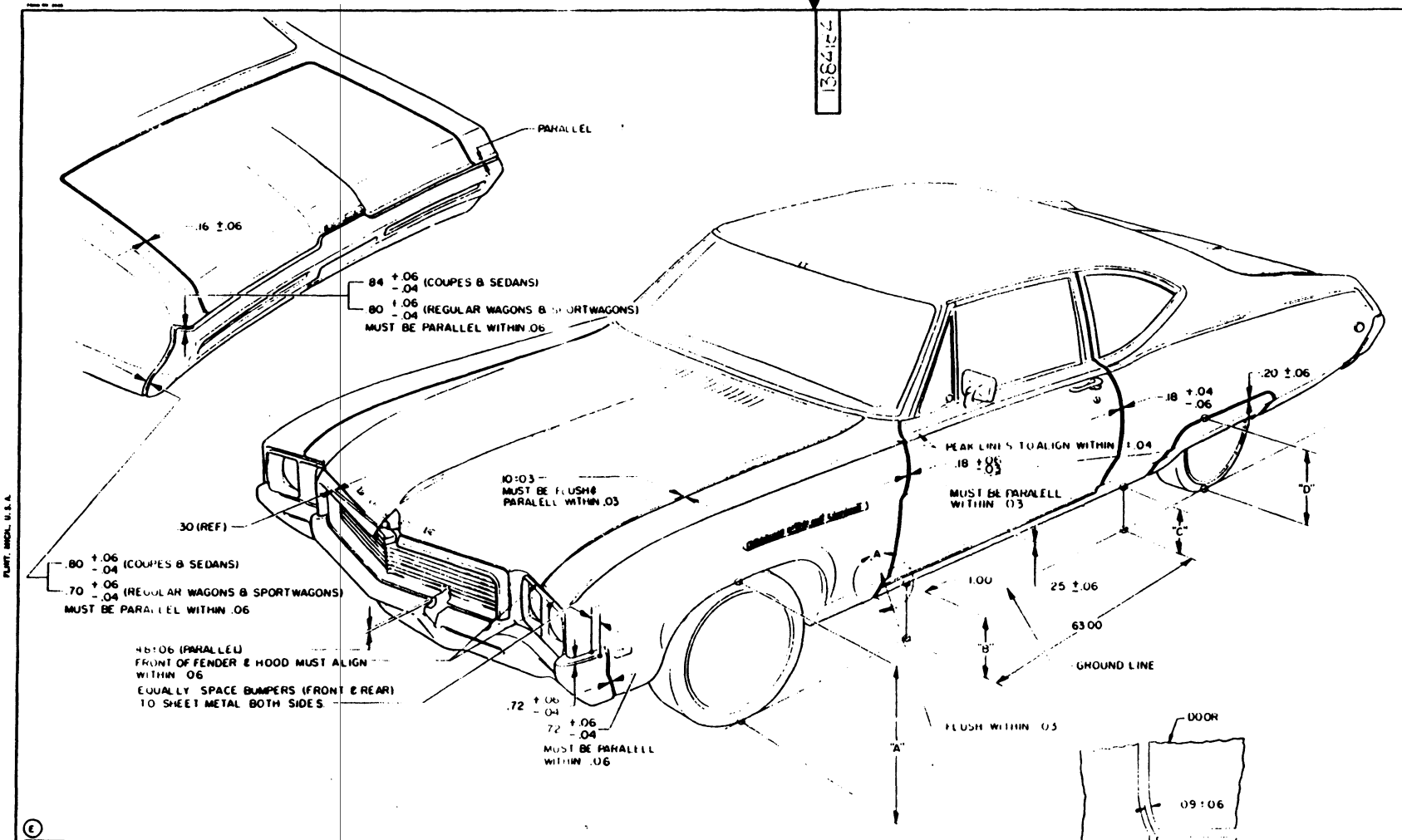

DIM	COUPES	SEDANS	L 6 COUPES	L 6 SEDANS	V-8 COUPES	V-8 SEDANS	GS 400		REGULAR WAGON		SPORTWAGON		
	CURB		4 PASS		4 PASS		CURB	4 PASS	[illegible]	5 PASS	CURB REG	CURB ALC	5 PASS
A	26.88		25.71		25.80		26.47	25.54	27.84	26.58	28.05	28.05	26.84
B	10.10		8.69		8.76		9.59	8.43	11.17	9.73	11.52	11.39	10.15
C	10.00		8.16	8.20	8.18	8.22	9.29	7.63	11.29	9.49	12.04	11.59	10.26
D	20.93		18.99		18.99		20.15	18.36	[illegible]	20.35	23.15	[illegible]	[illegible]

DIMENSIONS GIVEN DO NOT INCLUDE MOULDINGS

DATE	SYM	REVISION RECORD	AUTH	DR	CK
[illegible]	A	REMOVED [illegible]			
[illegible]	B	[illegible]			
[illegible]	C	[illegible]			
[illegible]	D	[illegible]			
[illegible]	E	[illegible]			
[illegible]	F	[illegible]			

DO NOT SCALE — REPORT ERRORS

TOLERANCES UNLESS OTHERWISE SPECIFIED
± ALLOWED ON TWO PLACE DECIMALS
± .010 ALLOWED ON THREE PLACE DECIMALS
COMMERCIAL TOLERANCES APPLY TO STANDARD PARTS - ROLLED SECTIONS - SHEET METAL GAGES - DRILLED AND PUNCHED HOLES
BURR ALL DRILLED HOLES - COUNTERSINK ALL TAPPED HOLES .030 X 90°

DWG DATE [illegible] | SCALE [illegible] | DR R. SHIER
CK [illegible]
FIRST USED 1968 A ALL | APPR
REFERENCE | APPR
MATERIAL SPEC | APPR

NAME [illegible] CAR ALLEGHANCE & TRIM HEIGHT DIM

PART NO [illegible] | PAGE NO 0-11

BUICK MOTOR DIVISION
GENERAL MOTORS CORPORATION
FLINT, MICH., U.S.A.

14

DAVE GRAHAM INC. - 2015
ALL RIGHTS RESERVED

1384279

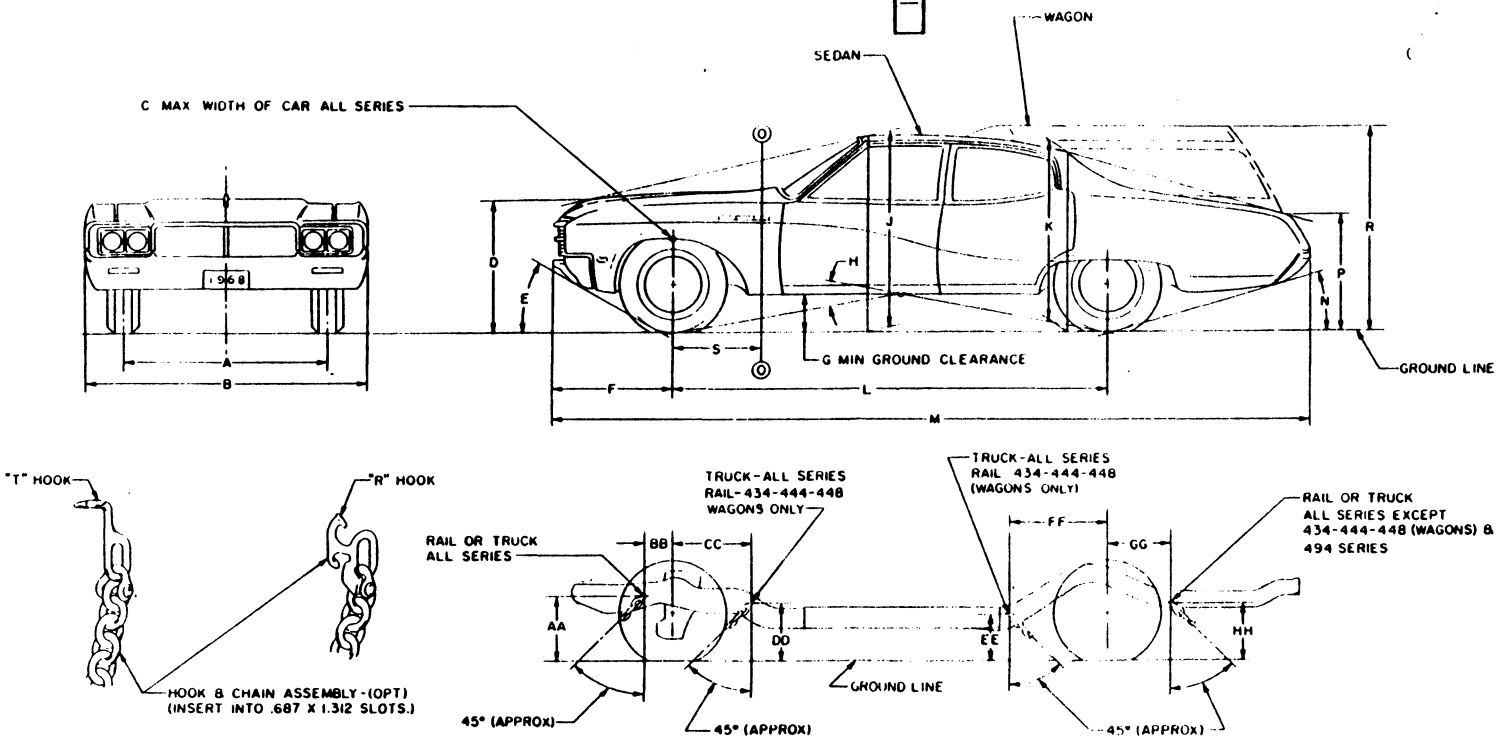

SERIES	DIMENSIONS																											
	A	B	C	D	E	F	G	H	J	K	L	M	N	P	R	S	AA	BB	◑ FT.	CC	DD	◑ FT.	EE	FF	◑ RR.	GG	HH	◑ RR.
433-434 435-444-446 LESS WAGON	59.00	74.68	75.60	35.74	24°30'	37.47	5.30	12°20'	54.45	52.81	MAX. 116.00	MAX. 204.66	17°30'	34.52	—	16.50	12.87	14.94	37.40	12.82	12.44	35.20	10.19	19.50	46.80	20.30	14.38	45.00
434-444 448-WAGONS	59.00	74.68	75.60	36.15	25°30'	37.47	6.26	15°10'	56.04	—	MAX. 121.00	MAX. 214.09	15°15'	—	59.01	16.50	13.58	14.94	37.40	12.82	13.47	35.20	11.14	19.50	46.80	12.00	17.37	46.44
452-454	63.00	79.64	80.00	36.00	23°33'	38.00	5.90	12°45'	56.15	54.45	123.00	217.46	14°	35.74	—	18.50	17.36	11.68	38.24	14.50	12.62	39.76	11.68	17.00	51.20	16.68	14.80	51.20
464-466	63.43	79.64	80.00	35.12	23°20'	38.00	5.63	12°5'	55.73	54.42	126.00	220.46	13°40'	36.16	—	21.50	16.59	11.68	38.32	LT11.80 RT13.00	LT15.34 RT14.65	38.96	11.65	17.00	51.20	16.68	14.97	51.20
482 484	63.43	79.64	80.00	35.30	23°45'	38.00	5.74	12°25'	56.27	55.73	126.00	224.88	13°	37.10	—	21.50	16.70	11.68	38.32	LT11.80 RT13.00	LT15.48 RT14.75	38.96	11.6[illegible]	17.00	51.20	16.68	15.16	51.20
494	63.47	77.70	78.84	34.93	19°48'	41.92	4.87	10°56'	53.73	52.26	119.00	215.22	15°29'	33.75	—	23.50	17.33	11.68	38.58	LT11.60 RT12.34	LT15.00 RT16.75	38.96	13.68	9.93	26.54	—	—	—

DATE	SYM	REVISION RECORD	AUTH	DR	CK
3-31-67	A	X REMOVED		DM	

◑ FRONT AND REAR ACROSS FRAME DIMENSIONS

DIMENSIONS SHOWN TO GROUND ARE MAX. ACTUAL CURB DIMENSIONS EXCEPT NORMAL MIN. FOR GROUND CLEARANCE, APPROACH, DEPARTURE & RAMP BREAK OVER ANGLES.

TOLERANCES MUST BE CONSIDERED ADDITIONAL.

DO NOT SCALE — REPORT ERRORS

TOLERANCES UNLESS OTHERWISE SPECIFIED
± ALLOWED ON TWO PLACE DECIMALS
± .010 ALLOWED ON THREE PLACE DECIMALS

COMMERCIAL TOLERANCES APPLY TO STANDARD PARTS - ROLLED SECTIONS SHEET METAL GAGES - DRILLED AND PUNCHED HOLES

BURR ALL DRILLED HOLES COUNTERSINK ALL TAPPED HOLES .030 X 90°

DWG DATE 12-9-66 — SCALE 1/1 — DR R SHIER
FIRST USED 1968 ALL — CK [illegible] — APPR [illegible]
REFERENCE — APPR — APPR
MATERIAL SPEC
NAME [illegible]
PART NO — PAGE NO

1384279

DAVE GRAHAM INC. - 2015
ALL RIGHTS RESERVED

HEATER HOSE USAGE CHART

PART NO.	LENGTH	DIA.	LOCATION	MODELS
394503	47.00"	3/4" I.D.	Water Pump to Heater Core	"A" L6 All & "A" V8 Std Htr
394523	47.00"	5/8" I.D.	Eng. Fitting to Heater Core Inlet	"A" L6 All
1385842	Formed	5/8" I.D.	Eng. Fitting to Heater Core Inlet	"A" V8 Std Htr
1358372	40.00"	3/4" I.D.	Water Pump to Heater Core	"A" V8 Air Cond
1341622	34.00"	5/8" I.D.	Water Valve to Heater Core	"A" V8 Air Cond.

*6-27-67
PART NUMBER- 1383770
PAGE NUMBER- 0-6.1

DAVE GRAHAM INC. - 2015
ALL RIGHTS RESERVED

PART NO.	ITEMS TO BE PLACED IN THE I.P. COMPARTMENT WHERE APPLICABLE & CAR KEY INFO.
1385549 1385552 1389362	Coupes & Sedans Wagons Only GS400 Only Tire Pressure Labels to be secured to I.P. Compartment Door.
1385205	Start Procedure Tag - Install in readily visible position for driver (All series).
	Protect-O-Plate See Page 1-14.1
1385491	Booklet - Accessory
7792218	Booklet - Folding Top
1385488 3406210	Booklet - Owners Manual - Domestic - Canadian
1385489	Booklet Owners Protection Plan and Warranty
3406211	Booklet Owners Protection Plan (Canadian only) - Omit Protect-O-Plate
7034701	Key Coded - Round - I.P. Compartment and Trunk NOTE: Blank Key #7034702 - For use when key is lost or damaged.
7034679	Key - Hex Coded Ignition & Door Locks NOTE: Blank Key #7034680 - For use when key is lost or damaged.

NOTE: Hub caps and wheel cover assembly package to be placed in rear compartment for dealer installation.

NOTE: The Traffic Dept. car loading and shipping instructions Booklet will specify where all car keys are to be placed for final car shipment.

Revised 9-26-67
PART NUMBER- 1383770
PAGE NUMBER- 0.8.1

DAVE GRAHAM INC. - 2015
ALL RIGHTS RESERVED

AUTOMATIC TRANSMISSION

A. Oil Level

Oil level is to be at the "Full Mark" plus or minus one quarter of a pint with transmission sump oil at normal operating temperature (180°F.)

1. Super Turbine 300 (M31)

   Equivalent level for assembly plants is one inch (1.00") below the full mark prior to roll test using the following procedure.

   a. Add approximately 7 pints of oil to transmission prior to first engine start.
   b. At first engine start, fast idle engine (100 rpm min.) for one (1) minute minimum.
   c. Adjust oil to specified limits prior to shifting the transmission the first time with the engine running.

2. Super Turbine 400 (M40)

   Equivalent level for assembly plants is three-quarters inch (.75") below the full mark prior to roll test using the following procedures:

   a. Add approximately 10½ pints of oil to transmission prior to first engine start.
   b. At first engine start, fast idle engine (1000 rpm min.) for one (1) minute minimum.
   c. Adjust oil to specified limits.

DAVE GRAHAM INC. - 2015
ALL RIGHTS RESERVED

AUTOMATIC TRANSMISSION (CONT'D)

2. Super Turbine 400 (M40)

(1) Car must be on a level surface, engine idling, in Park or Neutral range, when correcting level and rechecking.
(2) Any level check procedure from that described above must be approved by Buick Production Engineering and Quality Control.
(3) Check release ticket for approved sources of Automatic Transmission Oil 9985158.

B. Shift Adjustment

Column Shift - See Trans. Lever Control Information Dwg. (7-3.1).
Console Shift - See Trans. Control Information Dwg. (7-5.1).

C. Operation

1. General Functional Check

a. Check for gear noise level during functional checks in Neutral, Drive & Reverse.
b. Do not shift to park or reverse with rolls turning.
c. Check neutral safety switch for adjustment. Car must not start in Reverse, Drive or Low ranges.
d. Check operation of parking pawl on 10% grade or with car moving 2-3 mph (walking speed), shift into park. Pawl should engage and release freely without ratcheting.

DAVE GRAHAM INC. - 2015
ALL RIGHTS RESERVED

TRANSMISSION OIL FILL AND PROCEDURES

C. Operation (Cont'd)

2. Super Turbine "300" (M31)

a. Make light throttle start and check for upshift speed (10-15 mph).
b. Open throttle thru detent and check for downshift.
c. Shift to low range below 45 mph and observe shift.
d. Stop wheels, shift to reverse, and accelerate lightly.

* 3. Super Turbine "400" (M40)

a. Make light throttle start and make 1-2 upshift at approximately 15-20 mph.
b. Release throttle so transmission will 2-3 upshift below 30 mph.
c. Check for part throttle downshift (3-2) by applying approximately 3/4 throttle as fast as possible. Do not go to wide open throttle.
d. Release throttle once downshift has been made to allow the transmission to make 2-3 upshift. Accelerate to 40-45 mph.
e. Make wide open throttle acceleration. Check for 3-2 downshift.
f. With car above 50 mph, close throttle and shift to "L_1" range from "Drive". Check for immediate 3-2 downshift. As car speed decreases, check for 2-1 downshift at approximately 35 mph.
g. Stop wheels, shift to reverse, and accelerate lightly.

MANUAL TRANSMISSION

A. Oil Level

Three (3) Speed

43 & 4400 - Fill with 3-3/8 pints of GM 9985044 Oil.
G.S. 400 - Fill with 3.5 pints of GM 9985044 Oil.

Four Speed

Fill with 2-1/2 pints of GM 9985044 Oil.

* Revised 9-19-67

DAVE GRAHAM INC. - 2015
ALL RIGHTS RESERVED

MANUAL TRANSMISSION (Cont'd)

B. Shift Adjustment

Three (3) Speed

43 & 4400 - Ref. See Trans. Control Drawings (Section 7)

G.S - Ref. See Trans. Control Drawings (Section 7)

Four (4) Speed

G.S. 400 - Ref. See Trans. Control Drawings (Section 7)

C. Operation

Each transmission must be tested for the following on the roll test:

1. Correct synchronization - both up and down shifting.
2. Gear and bearing noise in speeds and neutral.
3. Shifting into all speeds for smooth effort and no gear clash.
4. Check for shift linkage adjustment and linkage rattles.

D. Clutch Lash

Reference Information Assembly - Section 7.

E. Assembly Precautions

Install two guide pins in the rear face of the clutch housing long enough to guide the transmission input shaft as it enters the housing. This prevents possible damage to the clutch release bearing, yoke assembly, and clutch driven member assembly.

Input shaft must slide through the clutch release bearing freely. Do not force shaft through the bearing. Random torque attaching transmission to housing bolts.

DAVE GRAHAM INC. - 2015
ALL RIGHTS RESERVED

A check must be made on 100% of production to make certain that the parking lock will hold the car on a 10% grade or equivalent. All cars must have the entire cooling system pressurized to 15 psi. All hose connections and the complete radiator are to be inspected visually for leaks.

BLACK LIGHT CHECK

* Each car must be checked with a black light after roll test for leakage at the following locations:

Radiator

- Hose Bottom
- Heater hose
- Cooler line
- Petcock

Brake Lines

- Wheel Cylinder
- Junction Block
- Brake lines, all fittings

Engine

- Oil Filter
- Oil Pan Gasket
- Dip Stick
- Drain Plug (water)
- Front Seal
- Rocker Arm Cover Gaskets
- Lifter Cover
- Drain Plug (pan)
- All oil lines and fittings

*5-2-67

PART NUMBER- 1383770
PAGE NUMBER- 0-10-1

DAVE GRAHAM INC. - 2015
ALL RIGHTS RESERVED

AUTOMATIC TRANSMISSION

Vacuum modulator
Pan gasket
Rear bearing retainer to case
Prod. shaft seal
Converter area
Cooler lines
Filler pipe to case
Governor cover
Speedometer sleeve
Servo cover
Pipe plugs
Detent connector

MANUAL TRANSMISSION

Plugs
Top and side cover seals
Prop shaft seal
Rear bearing retainer to case
Transmission to clutch housing area

REAR AXLE

Rear wheel seals
Rear axle drain plug
Front pinion seals

If a leak is noted in any of these areas, it must be repaired and retested with a black light before it can be accepted. Prior to the roll tests, it is necessary to steam clean these locations. This will remove excess oil caused by spillage and eliminate unnecessary repair.

DAVE GRAHAM INC. - 2015
ALL RIGHTS RESERVED

ASSEMBLY PLANT REPAIRABLE ITEMS

Only the following repairs to be made in the Assembly Plants:
Units listed below to be changed, but major repairs of these units should not be made.
Use only properly trained personnel.

Carburetors
Delcotron
Distributors
Starters
Vacuum Lines
Oil Pans, Gaskets and Seals
Fuel Filters
Water Pumps and Housings
Balancers
Exhaust and Intake Manifolds and Gaskets
Water Outlet Castings
Valve Covers and Gaskets
Oil Liners (Outside)
Cylinder Head and Block Casting Welch Plugs (if holes are not defective)
Oil Filter and Attaching Base
Oil Filter Tube and Dip Stick
Rocker Arms, Shaft and Bracket Assembly
Valve Lifters
Engine Front Cover and Gasket
Oil Pumps
Clutch Discs and Pressure Plate Assemblies
Clutch Release Yoke and Bearing
Front and Rear Motor Mounts and Brackets
Engine Temperature Indicators
Cylinder Head Assemblies
Thermostats
Water Manifold
Exhaust Heat Valve

*1-16-67
PART NUMBER- 1383770
PAGE NUMBER- 0-11.1

DAVE GRAHAM INC. - 2015
ALL RIGHTS RESERVED

POWER STEERING GEAR

Hoses and External Pipes only. No repairs to be made which require opening the Steering Gear Housing.

DELCO REMY PARTS

Minor repairs only. Hold for inspection and disposition by vendor's representative.

AIR CONDITIONING REQUEST

Plenum Blower Assemblies
Expansion Valve
Suction Throttling Valve
Other defective units should be disposed of as authorized by vendor.

FRAMES

Minor straightening of flanges, step hangers permitted. Badly bent or damaged frames should not be placed into production. The exercise of good judgment will determine the extent of practical straightening advisable, bearing in mind that design dimensions must be maintained.

A.C. DIVISION PARTS

Minor repairs only. Vendor representative will authorize disposition of non-repairable material.

STEERING TIE RODS

Component parts may be replaced. Positively no attempt shall be made to straighten bent or sprung parts.

LAMPS

Component parts such as bulbs, sockets, lens, etc., may be replaced.

DAVE GRAHAM INC. - 2015
ALL RIGHTS RESERVED

ASSEMBLY PLANT REPAIRABLE ITEMS

TRANSMISSION THREE AND FOUR MANUAL SYNCHROMESH

TRANSMISSION - AUTOMATIC

Oil Pan and Gasket
Adjustment Hole Covers and Gaskets
Breather Assembly
Speedo Drive Gear
Governor Assembly
Vacuum Modulator Assembly
Transmission Oil Cooler Lines & Connectors
(We do not recommend changing any other operating part of the transmission).

REAR AXLES

Brake Backing Plate Assemblies
Brake Drums
Wheel Cylinders, Brake Shoes, Etc.
Axle Shafts for Loose Wheel Studs

Differential Carrier Change is not permissible.

*5-18-67
PART NUMBER- 1383770
PAGE NUMBER- 9-11-3

DAVE GRAHAM INC. - 2015
ALL RIGHTS RESERVED

BUICK

1968 ACCESSORY AND OPTION CODES

	UPC	CARD COL.	SALES CODE	DESCRIPTION	OPTIONS
(Engines)	L92	29	A1	Engine - Low Compr. L6 - Export - 250 Cu.In. 1 Bbl. Carb.	43,435 Export
	L30	29	A3	Engine - Std. Compr. V8 - 350 Cu.In. 2 Bbl. Carb.	43,435
	L90	29	A4	Engine - Low Compr. V8 - Export - 350 Cu.In. 2 Bbl. Carb.	43,43435,435,444,448,45
	L90	29	A5	Engine - Low Compr. V8 - Export - 430 Cu.In. 4 Bbl. Carb. (B2 Req. Series 46)	46,48,49 Export
	L77	29	A7	Engine - High Perf. V8 - 350 Cu.In. 4 Bbl. Carb. (2 Bbl. Carb. Std. on 444,448,45)	43,44 (Except 43437 and 446), 45 (Series 45 Available with Auto.Trans. Only); Std. on 43437
	W09	29	A9	LeSabre High Perf. Group - Includes 350 Cu.In. 4 Bbl. Carb. High Perf. Engine A7-L77, Super Turbine Trans. B2-M40, and Specific Ornamentation B94	45
	W01	29	A9	Sportwagon 400 - Includes 400 Cu.In. 4 Bbl. Carb. High Perf. Engine L74 (with 430 Cu.In. Engine Air Cleaner), Super Turbine Trans. B2-M40, and Specific Ornamentation B94	Extended Wagons
	Y49	29	A9	Riviera Gran Sport - Includes Heavy Duty Suspension Front and Rear F40, Chrome Covered Air Cleaner K17, Performance Axle with Positraction Differential with 3.42 Ratio G91, Instrument Panel Monogram B11, Front Fender Monogram T52 L-Stripe N 45 x 15 W.W. Std.	49
(Transmission) (Long Console) (Consolette)	M31	30	B1	Transmission - Super Turbine 400 (Note: Std. Manual Trans. Series 45 cars will be built at Flint only)	43,44 (Except N.A. 446), 45
	M40	30	B2	Transmission - Super Turbine 400 (Note: Std. Manual Trans. cars will be built at Flint only except Series 446,464,466)	Extended Wagons,446,45,46; Std. 48,49 Note: Avail. Extended Wagons and Series 45 only in Opt. A9
	M20	30	B3	Transmission - 4-Speed Manual (Floor Shift) N.A. on Full Length Console Jobs	43437,446
	D55	30	B4	Full Length Console (Bucket Seats A51 or Y41 and Auto. Trans. B1-M31, or B2-M40 required)	43437,44437-67,446,46667-87,49487
	D57	30	B7	Consolette - For use only with 3-Speed Std. or 4-Speed (B3-M20) Manual Floor Shift Trans. and Bucket Seats A51 or Y41	43437,446
	M12	30	B9	Transmission - 3-Speed Manual (Floor Shift) N.A. on Full Length Console Jobs	43437
		30	BA	B1 + B4 (M31 + D55)	43437,44437-67
		30	BB	B3 + B7 (M20 + D57)	43437,446
		30	BC	B2 + B4 (M40 + D55)	446,46667-87
		30	BD	B7 + B9 (D57 + M12)	43437
(Brakes) (Power Strg.)	J52	31	C1	Disc Brakes (14 x 6 Whls. Req'd. on "A" Series) (Opt. C7 Req'd.) N.A. with Opt. V2-P05 on "A" Series Jobs (N.A. Series 45,46 with Std. 3-Speed Manual Transmission)	All Note: Avail. in 43,44,45,46 only in Opt. CB
	N41	31	C5	Power Steering 15:1 Ratio Gear	49 with Opt. A9 Only
	N40	31	C6	Power Steering (Note: N.A. on Series 45,46 with Std. 3-Speed Manual Trans.)	43,44,45,46; Std. 48,49
	J50	31	C7	Power Brakes (Note: N.A. on Series 45,46 with Std. 3-Speed Manual Trans.) (Req'd. with C1)	43,44,45,46; Std. 48,49
		31	CA	C1 + C5 (J52 + N41)	49 with Opt. A9 Only
		31	CB	C1 + C7 (J52 + J50)	43,44,45,46
		31	CC	C6 + C7 (N40 + J50)	43,44,45,46; Std. 48,49
		31	CD	C6 + CB (N40 + J50 + J52)	43,44,45,46
(Radios)	U63	32	D1	Manual Antenna Sonomatic Radio	All
	U64	32	D2	Electric Antenna (U75) Sonomatic Radio	45,46,48,49 (First Jobs); All (After Jobs) Except Wagons
	U57	32	D3	Stereo Tape Player (Note: Radio and Rear Seat Speaker Required; Not Available on "A" Series with Consolette)	All and Convertibles "A" Series
	W06	32	D4	AM-FM Stereo Package (Includes: Front Speaker (U58), Rear Speaker (U80), and Electric Antenna (U75))	45,46,48,49
	U69	32	D5	Manual Antenna AM-FM Radio	43,44
	W03	32	D5	Electric Antenna (U75) AM-FM (U69) Radio	45,46,48,49
	U80	32	D6	Rear Speaker (Note: Included in D4 When Ordered)	All
	UN1	32	D7	Electric Antenna (U75) AM-FM (U69) Radio	43,44 (After Jobs) Except Wagons and Convertibles
		32	DA	D1 + D3 + D6 (U63 + U57 + U80)	All
		32	DB	D2 + D3 + D6 (U64 + U57 + U80)	45,46,48,49 (First Jobs); All (After Jobs) Except Wagons and Convertibles
		32	DC	D3 + D4 (U57 + W06)	45,46,48,49 "A" Series
		32	DD	D3 + D5 + D6 (U57 + U69 or W03 + U80)	All
		32	DE	D1 + D6 (U63 + U80)	All
		32	DF	D2 + D6 (U64 + U80)	45,46,48,49 (First Jobs); All (After Jobs) Except Wagons and Convertibles "A" Series
		32	DG	D5 + D6 (U69 or W03 + U80)	All
	#	32	DH	D3 + D6 + D7 (U57 + U80 + UN1)	43,44 (After Jobs) Except Wagons and Convertibles
	#	32	DJ	D6 + D7 (U80 + UN1)	43,44 (After Jobs) Except Wagons and Convertibles
	N10	33	E1	Dual Exhaust (Note: Auto. Trans. required on Series 46)	46,48; Std. 43437,446,494
	NC7	33	E3	California Resonator (No Cost to Dealer)	46,48 Single Exhaust; Sportwagon 400

DAVE GRAHAM INC. - 2015
ALL RIGHTS RESERVED

1968 ACCESSORY AND OPTION CODES

	UPC	CARD COL.	SALES CODE	DESCRIPTION	OPTIONS
(Tires)	P26	34	F1	Tire - W.W. 7.75 x 14 (B - Std.)	433,434,435,444 Except Extended Wagons; Std. on 446 (First Jobs). 433,43437,435,444 Except Extended Wagons; Std. on 446 (After Jobs)
	P27/P30	34	F2	Tire - O.S. W.W. 8.25 x 1 - 6" Wheel Required)	433,435,44437-39-67-69 (P27); 434,446 (P30) (First Jobs). 433,435,44437-39-67-69 (P27); 43437,446 (P30) (After Jobs).
	P28/P29	34	F3	Tire - O.S. B.W. 8.25 x 1 - 6" Wheel Required)	433,435,44437-39-67-69 (P28); 434,446 (P29) (First Jobs). 433,435,44437-39-67-69 (P28); 43437,446 (P29) (After Jobs).
	P16	34	F5	Tire - W.W. 7.75 x 14 - 4 - Export and Canada	433,434,435,444 Except Extended Wagons (First Jobs). 433,43437,435,444 Except Extended Wagons (After Jobs)
	P37/P58	34	F6	Tire - O.S. W.W. 8.25 x 1 - 4 Ply Export and Canada (6" Wheel Required)	433,435,44437-39-67-69 (P37); 434,446 (P58) (First Jobs). 433,435,44437-39-67-69 (P37); 43437,446 (P58) (After Jobs).
	P33	34	F7	Tire - W.W. 205 R-14 Radi - Ply (8.25 x 14) (6" Wheel Required)	433,434,435,444,446,448 Except 44465,44865
	P26	34	F1	Tire - W.W. 8.25 x 14 (B - Std.); (6" Wheel Std.)	44455,44855 (First Jobs); 43435,44455,44855 (After Jobs).
	P26	34	F1	Tire - W.W. 8.55 x 14 - 2 - Ply (6" Wheel Std.)	44465,44865
	P30	34	F2	Tire - O.S. W.W. 8.55 x 1 - 4 Ply Rating (6" Wheel Std.)	44455,44855 (First Jobs); 43435,44455, 44855 (After Jobs)
	P29	34	F3	Tire - O.S. B.W. 8.55 x 1 - 4 Ply Rating (6" Wheel Std.)	44455,44855 (First Jobs); 43435,44455,44855 (After Jobs)
	PE1	34	F4	Tire - W.W. 8.55 x 14 - 4 - Ply (6" Wheel Std.)	44465,44865
	P16	34	F5	Tire - W.W. 8.25 x 14 - 4 - Ply Export and Canada (6" Wheel Std.)	44455,44855 (First Jobs); 43435,44455,44855 (After Jobs)
	P16	34	F5	Tire - W.W. 8.55 x 14 - 4 - Ply Export (6" Wheel Std.)Export and Canada	44465,44865
	PW8	34	F8	Tire - Wide Oval Red Line (6" Wheel Std.)	60-14 (N.A. Any other Series Domestic) 446
	PW7	34	F9	Tire - Wide Oval W.W. F-70 - (N.A. any other Series Domestic)	446
	PWR	34	F8	Tire - Wide Oval Red Line 70-15 Export and Canada	433,435 w/V8 Eng. Opt.; Also 434-44437-39-67-69
	P26	34	F1	Tire - W.W. 8.45 x 15 - B - Std.	45,46
	P30	34	F2	Tire - O.S. W.W. 8.85 x 15	45,46
	P29	34	F3	Tire - O.S. B.W. 8.85 x 15	45,46
	P16	34	F5	Tire - W.W. 8.45 x 15 - 4 - - Export and Canada	45,46,49
	P58	34	F6	Tire - O.S. W.W. 8.85 x 1 - 4 Ply - Export and Canada	45,46
	P33	34	F7	Tire - W.W. 225 R-15 Radia - Ply (8.85 x 15)	45,46,48,49
	P26	34	F1	Tire - W.W. 8.85 x 15 (B W - Std.)	48
	P16	34	F5	Tire - W.W. 8.85 x 15 - 4 - Export and Canada	48
	PV2	34	F8	Tire - Wide Oval Red Line 70-15	Domestic GS 49487
	PV2	34	F8	Tire - Wide Oval Red Line 70-15	45,46,49 Export and Canada
	P26	34	F1	Tire - 3-Stripe W.W. 8.45 - 15	Opt. with Non-GS 49487; Std. with GS 49487
	PV1	34	F9	Tire - Wide Oval W.W. (H-7 - 15)	Opt. with GS 49487
(Axles)	G91	35	G1	Performance Axle with Posi - action (Auto. Trans. required except on GS 400, 464,466)	All Except Std. on 49487 with Opt. A9
	G92	35	G2	Non-Positraction Performance Axle (Auto. Trans. required except on GS 400)	All
	G80	35	G4	Positive Traction Differential Axle	All Except on 49487 with Opt. A9
	G95	35	G5	Economy Axle - Non-Positraction (Auto. Trans. required; Also N.A. on 452, 454 with Air Conditioning) L77 Req'd. "A" Series Except Wagons	433,435,43435,44455-65,44437-39-67-69,448,45,46,48
	G89	35	G7	G.O. Axle with Positraction N.A. with Air Conditioning	43,44,45,48
	G90	35	G9	G.O. Axle with Positraction	All Except 43437
	G96	35	GA	G4 + G5 (G80 + G95) (Auto. Trans. required; Also N.A. on 452,454 with Air Conditioning) L77 Req'd. "A" Series Except Wagons	433,435,43435,44455-65,44437-39-67-69,448,45,46,48
(Towing, Ride and Handling	G50	36	H1	Trailer Towing Option - Specific Rear Springs and Specific Front and Rear Shock Absorbers on all but GS and Sportwagon, on which this option consists of specific Rear Springs only	All (N.A. when H2,H3,H4, - H6 is specified or on 49487 when Opt. A9 is specified) N.A. 43437
	F40	36	H2	Ride and Handling Option - Consists of Specific Front Shock Absorbers, Front and Rear Springs, and on "A" Series, a larger Diameter Stabilizer Bar	All Except Extended Wagons and Series 446; Std. 43437. Also, Std. on 49487 when Opt. A9 is specified. Also, N.A. on any Jobs when H1, H3, H4, or H6 is specified
	G67	36	H3	Automatic Level Control - Includes Specific Rear Shocks and Rear Springs, Also, Front Springs on Wildcat and Electra (Specific Rear Springs Not Required on 49487)	Extended Wagons, 45,46,48,49, N.A. when Opt. H1 or H2 is specified or on 49487 when A9 is specified
	Y43	36	H6	Rallye-Road Control Package - Consists of N41 15:1 Power Steering and F41 Rear Suspension Stabilizer Bar, Front and Rear Firm Ride Springs and Shock Absorbers Firm Ride Tuned)	43437,446

DAVE GRAHAM INC. ©2015 ALL RIGHTS RESERVED

1968 ACCESSORY AND OPTION CODES

	UPC	CARD COL.	SALES CODE	DESCRIPTION	OPTIONS
(Energizer)	T60	36	H5	Heavy Duty Energizer	43,44 Except 446
	F41	36	H6	Rallye-Ride Control Package (Consists of Rear Suspension Stabilizer Bar, Front and Rear Firm Ride Springs and Shock Absorbers Firm Ride Tuned)	43437-446
		36	HA	H1 + H5 (G50 + T60)	43,44 Except 446,43437
		36	HB	H2 + H5 (F40 + T60)	43,44 Except 446, Extended Wagons, and 43437
		36	HC	H3 + H5 (G67 + T60)	Extended Wagons
		36	HD	H4 + H5 (Y43 + T60)	43437
		36	HE	H5 + H6 (T60 + F41)	43437
(Heating and Cooling)	C61	37	I5	Automatic Climate Control - Air Cond. System (N.A. with I8)	45,46,48,49
	C60	37	I6	Air Conditioner - Manual Controls (N.A. with I8)	All
	Y40	37	I7	Heavy Duty Cooling - Includes Fan Drive Thermo Control K02, Fuel Return Lines on 350 Cu.In. Engine K15, 55 Amp. Delcotron K77, Heavy Duty Radiator V02 Note: Opt. Y40 not avail. when Air Conditioning is specified	All
	C48	37	I8	Delete Heater and Defroster (Export Only)	All (N.A. 48,49)
		37	IA	I7 + I8 (Y40 + C48) (Export Only)	All (N.A. 48,49)
(Seat and Shoulder Belts)	A39	38	J1	Custom Front and Rear Seat Belt	43,44,45,46; Std. 48,49 (First Jobs); 44467, 44667,45467,46667; Std. 48467 (After Jobs)
	A48	38	J2	Delete All Belts	All (Export)
	W14	38	J3	Custom Front Shoulder Belts (A85) - Also Includes Custom Front and Rear Seat Belts (A39) where Applicable	All (First Jobs); 43,44,45,46,48467; Std. 48,49 Except 48467 (After Jobs)
	W15	38	J5	Custom Rear Shoulder Belts (A54) - Also Includes Custom Front Shoulder Belts (A85) and Custom Front and Rear Seat Belts (A39) where Applicable	All (First Jobs); All (After Jobs)
	A51	38	J6	Non-Custom Front Shoulder Belts and Non-Custom Front and Rear Seat Belts - For Internal Use Only	43,44,45,46 Except Convertibles (After Jobs)
	T87	39	K2	Cornering Lights (Note: N.A. Series 45,46 with Std. 3-Speed Manual Trans.)	45,46,48,49
	U15	39	K3	Speed Alert (Included in Kilo. Speedo Option)	All
	C24	39	K4	Depressed Park Position for Concealed Windshield Wipers	43327-69,43435; Std. all others
		39	KA	K2 + K3 (T87 + U15)	45,46,48,49
		39	KB	K3 + K4 (U15 + C24)	43327-69,43435
(Glass)	A01	40	L1	Soft-Ray Tinted Glass	All
	A02	40	L2	Soft-Ray Tinted Glass - Windshield Only	All
	C50	41	M7	Rear Window Defroster	All Except Wagons and Convertibles
	K05	41	M8	Heater-Engine Block (Canada Only)	434,444,448,45,46,48; N.A. 446,494, or V6: Avail. 433-435 with V8 Eng. Opt.
		41	MA	M7 + M8 (C50 + K05) (Canada Only)	43437,44437-39-69,45,46,48 Except Corvette 43327-69, 43537-69 with V8 Eng. Opt.
	U05	42	N2	Four Note Horn	45,46,48,49
	K45	42	N3	Heavy Duty Air Cleaner with Dual Stage Element for Dusty Areas	All Except L6 Manual Trans.
		42	NA	N2 + N3 (U05 + K45)	45,46,48,49
	B93	43	O4	Door Guards (Fisher Installed)	All Except Wagons
	D33	43	O5	Remote Control Outside Rear View Mirror	All
	Y56	43	O7	Protection Group (Door Guards O4-B93 and Gas Tank Filler Door Guard B87 - All Fisher Installed)	Wagons Only
		43	OA	O4 + O5 (B93 + D33)	All Except Wagons
		43	OB	O5 + O7 (D33 + Y56)	Wagons Only
	Y56	44	P1	Carpet Savers - Front P2-B32, and Rear Floor Mats B33	All
	B32	44	P2	Carpet Savers Only	All
	A42	45	Q4	Power Seat - 6-Way - Bench Only	45,46,48,49
	A41	45	Q5	Power Seat - 4-Way Tilt Adjuster - Bench Seat, and A46 for Bucket Seat Note: 2-Way Power Seat Std. on 48467	All
	B54	45	Q6	Custom Padded Cushions - Front B50, Rear B52 Note: Std. on Bucket Seat Jobs	43,45,464; Std. 444,446,448,466,48,49
		45	QA	Q5 + Q6 (A41, A46 + B54)	43,45,464
		45	QB	Q4 + Q6 (A42 + B54)	45,464
	A31	46	R1	Power Windows	434,435,44,45,46,48,49; Std. on 48467
	A32	46	R2	Power Vents (Used with R1 Only)	48467 (Avail. 48 with Opt. R1 Except 48467)
		46	RA	R1 + R2 (A31 + A32)	48 Except 48467

DAVE GRAHAM INC. - 2015 ALL RIGHTS RESERVED

1968 ACCESSORY AND OPTION CODES

	UPC	CARD COL.	SALES CODE	DESCRIPTION	OPTIONS
	K30	47	S6	Cruise Master - N.A. with Manual Trans. or on L6 Jobs	All V8's with Auto. Trans.
	N33	47	S7	Tilt Steering Wheel - Note: N.A. With 3-Speed Manual Trans. Col. Shift on "A" Series or 3-Speed Manual Trans. or Manual Steering on Series 45 or 46 (Option X1,X2,X4, or X5 also required on Series 433 or M/43437)	All Except Std. 496
		47	SA	S6 + S7 (K30 + N33)	All Except 496
	A91	48	T1	Automatic Trunk Release	45,46,48,49
	A93	48	T2	Vacuum Operated Door Locks	All
		48	TA	T1 + T2 (A91 + A93)	45,46,48,49
(Convenience and Accessory Groups)	W20	49	U1	Convenience Group - Includes Dual Horns U09 (Std. on 43437), Trunk Light U25 (N.A. on Wagons) Glove Compartment Light U27, Ash Tray Light U28, Courtesy Light U29	433,43437
	W21	49	U2	Convenience Group - Includes Trunk Light U25 (N.A. on Wagons), Glove Compartment Light U27, Ash Tray Light U28, Electric Clock U35, Courtesy Light U29	43435,435
	W22	49	U3	Convenience Group - Includes Trunk Light U25 (N.A. on Wagons), Electric Clock U35	44
	Y58	49	U4	Accessory Group - Includes Trunk Light U25, Courtesy Light U29, Electric Clock U35, License Plate Frame V50	45,46; Std. 48,49
(Tachometer)	U16	49	U5	Tachometer - Note: For use only when Long Console or Consolette is specified (N.A. on "A" Series Long Console)	43437,446,46667-87
	U35	49	U6	Electric Clock	433,43437
		49	UA	U3 + U5 (W22 + U16)	446
		49	UB	U4 + U5 (Y58 + U16)	46667-87
		49	UC	U1 + U5 (W20 + U16)	43437
		49	UD	U1 + U6 (W20 + U35)	43327-69,43437
		49	UF	U1 + U5 + U6 (W20 + U16 + U35)	43437
(Wheel Covers)	P01	50	V1	Deluxe Wheel Cover (Specific Cover Std. on Wildcat and Riviera)	43,44,452; Std. 454
	P05	50	V2	Chrome Plated Wheel (N.A. w/ Opt. C1 on "A" Series)	43,44,46,49
	N95	50	V3	Wire Wheel Covers	43437, Extended Wagons, 446,45,46
	P02	50	V4	Super Deluxe Wheel Covers	45,49; Std. 48
		50	V5	Wood Grain Applique	44455-65 (See NOTE below)
	N66	50	V6	Rallye Wheels	43,44
		50	VA	V2 + V5	44455-65 (See NOTE below)
		50	VB	V3 + V5	44455-65 (See NOTE below)
		50	VC	V1 + V5	44455-65 (See NOTE below)
		50	VD	V5 + V6	44455-65 (See NOTE below)
	W04	51	W1	G.S. California - Includes GS 350 Grille, GS 350 Hood, GS California Emblem, Skylark Rear Deck Molding, GS on Sail Panel, Chrome Plated Air Cleaner (Must Order as WN)	43327
(Moldings)	W10	51	W2	Custom Bright Exterior Molding - Belt Reveal B85 and Front Wheel Opening B96 (Front and Rear Wheel Opening on 433,43435)	433,43435,435,44437-39-67-69
	T48	51	W3	Hood Top Center Molding	43327-69,43435
	Y57	51	W4	Custom Bright Exterior Molding - Body Side B84; Front Fender T53, Body Rear B86 (43435 Only)	43369,43435
		51	W5	Custom Bright Exterior Moldings	
	Y51	51		(Body Side B84 (Except 43327), Body Rear (Wagons Only) B86, Front Fender T53 (Except 43327), Hood Top Center and Headlamp Opening T48)	433,43435; (First Jobs) Std. 435
	B85	51		(Belt Reveal)	43437,44455-65,446,468
	W13	51		(Rear Quarter Lower Extension B84, Front and Rear Wheel Opening B96, Front Fender Lower Front T53, Rocker Panel Mldg. B83) (Note: Delete Std. Rocker Panel Mldg. on Series 452 when this Opt. is specified)	452; Std. on 454,464,466
	W13	51		(Lower Body Side B84, Front Fender Lower T53)	496
		51	W6	Custom Bright Exterior Moldings	
	W11	51		(Roof Drip Scalp and Windshield Pillar B80, Door Window and Center Pillar Scalp B90, Rear Quarter Window Scalp B91. Note: No B91 on Models 43369 and 43569. Note: B80 included in C08 on Model 43327)	433,43435,43569
	W11	51		(Roof Drip Scalp B80 and Door Window Frame B90 - B80 included in W07 when ordered)	45269,45469
	W11	51		(Belt Reveal B85 and Door Window Frame B90 - Omit B85 when W07 is specified)	46469
	Y51	51	W7	Custom Bright Sweep Moldings (Body Side B84, Frt Fndr. T53, Whl.Opening B96)	44455-65

DAVE GRAHAM INC. - 2015
ALL RIGHTS RESERVED

BUICK
1968 ACCESSORY AND OPTION CODES

UPC	CARD COL.	SALES CODE	DESCRIPTION	OPTIONS
D98		W8	G.S. Rallye Stripe	43437-446
# W18	51	W9	Custom Bright Exterior Molding - Add Front and Rear Wheelhouse Molding (B96), Body Reveal Molding (B85), and Delete Body Side Molding (T53 and B84)	435
	51	WC	W5 + W6 (Y51 + W11) (W13 + W11 on 45269)	43327-69,43435 (First Jobs), 45269
	51	WD	W2 + W6 (W10 + W11)	433,43435,43569 (First Jobs); 43569 Only (After Jobs)
#	51	WE	W6 + W9 (W11 + W18)	43569
	51	WG	W2 + W5 + W6 (W10 + Y51 + W11)	433,43435 (First Jobs)
	51	WH	W2 + W5 (W10 + Y51)	433,43435 (First Jobs)
	51	WJ	W5 + W7 (B85 + Y51)	44455-65
	51	WK	W5 + W8 (B85 + D98)	43437,446
	51	WN	W1 + W2 + W6 (W04 + W10 + W11)	43327 (GS California Only)
	51	WP	W3 + W4 (T48 + Y57)	43369,43435
	51	WR	W2 + W3 + W6 (W10 + T48 + W11)	43327-69,43435
	51	WS	W2 + W3 + W4 (W10 + T48 + Y57)	43369,43435
	51	WT	W3 + W6 (T48 + W11)	43327-69,43435
	51	WW	W3 + W4 + W6 (T48 + Y57 + W11)	43369,43435
	51	WX	W2 + W3 + W4 + W6 (W10 + T48 + Y57 + W11)	43369,43435
N30	52	X1	Deluxe Steering Wheel (See Opt. S7)	43327-69,43437; Std. All Others
Y53	52	X2	Appearance Group - Includes Carpeting Front and Rear Floor B30, Deluxe Steering Wheel N30 (See Opt. S7) Carpets Std. on 43369 with Trims 111,114,118	433
D56	52	X3	Floor Console - Short Non-Shift - with Bucket Seat Options A51 or Y41 Only	43437,44437-67,446; Std. 454,464,466,484,494 with Bucket Seats
N31	52	X4	Rallye Steering Wheel (See Opt. S7)	43,44
Y55	52	X5	Rallye Interior Appearance Group - Includes Carpeting Front and Rear Floor B30, Rallye Steering Wheel N31 (See Opt. S7) Carpets Std. on 43369 with Trims 111,114,118	433
N42	52	X6	Custom Steering Wheel	435,444,448,45,464
	52	XA	X3 + X4 (D56 + N31)	43437,44437-67,446
	52	XB	X1 + X3 (N30 + D56)	43437
	52	XC	X3 + X6	44437-67 with Bucket Seats
B39	53	Y2	Load Floor Area Carpet	Extended Wagons
V55	53	Y3	Luggage Rack	Wagons Only
V56	53	Y4	Luggage Locker with Lock	Extended Wagons
	53	YA	Y2 + Y3 (B39 + V55)	Extended Wagons
	53	YB	Y2 + Y4 (B39 + V56)	Extended Wagons
	53	YC	Y2 + Y3 + Y4 (B39 + V55 + V56)	Extended Wagons
	53	YD	Y3 + Y4 (V55 + V56)	Extended Wagons
A66	54	Z2	Divided Second Seat	43435,44455,44855; Std. 44465,44865
A33	54	Z4	Power Tailgate Window	All Wagons
C31	54	Z5	Follower Board, Tailgate	43435; Std. Extended Wagons
	54	ZA	Z2 + Z4 (A66 + A33)	43435,44455,44855
	54	ZB	Z2 + Z5 (A66 + C31)	43435
	54	ZC	Z4 + Z5 (A33 + C31)	43435
	54	ZD	Z2 + Z4 + Z5 (A66 + A33 + C31)	43435
Y42	56	1A	Reclining Seat Passenger Side Strato Bench A69 and Head Restraints A81, Both Sides	49
Y41	56	1B	Reclining Seat Passenger Side Strato Bucket A70 and Head Restraints A81, Both Sides	43437,44437-67,446,45487,46487,46667-87,48467,49487
A82	56	1C	Head Restraints Both Sides- Conventional Bench Seat	All
A81	56	1D	Head Restraints - Stratotype Seat	43437,44437-67,446,45487,46487,46667-87,48467,49487
P32	59	52	Delete Spare Tire - Export Only	All Except Wildcat

DAVE GRAHAM INC. - 2015
ALL RIGHTS RESERVED

BUICK
1968 ACCESSORY AND OPTION CODES

	UPC	CARD COL.	SALES CODE	DESCRIPTION	OPTIONS
	U18	60	66	Kilo Speedometer - Export Only with Speed Alert Included	All
	V78	60	67	Delete Plate Certificate of Compliance and Affix "This Motor Vehicle Is Intended Solely for Export" Label	All - Export Only
		60	68	66 + 67 (U18 + V78)	All - Export Only
		62	8W	Protection Spray and Export Preparation - S.U.P.	All
	V60	62	8X	Foot Tire Pump - Export	All
		62	8Y	8W + 8X	All
	T74	63	99	Export Dual Headlamps - Left Hand Rule of Road	All
	A51	Trim		Bucket Seats - Strato - Right and Left Front (See W17 and W08)	43437,44437-67,446,45487,46487,46667-87,48467; 49
	A65	Trim		Seat Assembly - Front Notch Back (See W17)	43537,44437-67; Std. 44439
	A52	Trim		Bench Seat - Front Conventional	49
	A53	Trim		Bench Seat - Front Strato	49
(Soft Trim Roof Covering)	C08	25	6	Soft Trim Roof Covering - Parchment (Includes Roof Drip Molding B80 on 43327) Note: Sail Panel Finish Mldg. is part of this Opt.	43327,43437,43537-69,44437-39-69,44637,44639-87, 46639-87,48239-57-69,48439-57-69,49487
	C08	25	2	Soft Trim Roof Covering - Black (Includes Roof Drip Molding B80 on 43327) Note: Sail Panel Finish Mldg. is part of this Opt.	43327,43437,43537-69,44437-39-69,44637,44639-87, 46639-87,48239-57-69,48439-57-69,49487
	C08	25	8	Soft Trim Roof Covering - Avocado (Includes Roof Drip Molding B80 on 43327) Note: Sail Panel Finish Mldg. is part of this Opt.	43327,43437,43537-69,44437-39-69,44637,44639-87, 46639-87,48239-57-69,48439-57-69,49487
	C08	25	7	Soft Trim Roof Covering - Buckskin (Includes Roof Drip Molding B80 on 43327) Note: Sail Panel Finish Mldg. is part of this Opt.	43327,43437,43537-69,44437-39-69,44637,44639-87, 46639-87,48239-57-69,48439-57-69,49487
(Vinyl Tops)	W07	25	6	Custom Vinyl Roof Covering (C08) Parchment and Belt Reveal Molding (B85) with Roof Drip Molding B80 on 43269,45469 (B80 Std. on 46469)	452,45439-69-87,46469
	W07	25	2	Custom Vinyl Roof Covering (C08) Black and Belt Reveal Molding (B85) with Roof Drip Molding B80 on 43269,45469 (B80 Std. on 46469)	452,45439-69-87,46469
	W07	25	8	Custom Vinyl Roof Covering (C08) Avocado and Belt Reveal Molding (B85) with Roof Drip Molding B80 on 43269,45469 (B80 Std. on 46469)	452,45439-69-87,46469
	W07	25	7	Custom Vinyl Roof Covering (C08) Buckskin and Belt Reveal Molding (B85) with Roof Drip Molding B80 on 43269,45469 (B80 Std. on 46469)	452,45439-69-87,46469
	W08	Trim		Front Bucket Seat A51 and Rear Seat Custom Padded Cushion B52	45487,46487,43437
	D99	23,24		Two Tone Paint (Includes Rear Quarter Belt Fin. Molding - Except on Wagons)	All Except Convertibles and Series 49
	W12	Trim		Extra Cost Deluxe Trim - Includes B30 and D15 Identical to M/43569 - Trim Combs. 111,114,118	43369
	W17	Trim		Extra Cost Deluxe Trim - Includes A51 or A65, C87, D15, Y17, B28 (A51 on 43437 Trims 170,171,172,173,178) (A65 on 43537 Trims 160,161,162,163,168)	43437,43537
	Y45	Trim		Extra Cost Deluxe Trim - Includes A53, B18, B25, D15, U37, Y18 Available with Trim Combinations 680, 682, 683, 684, 685, 688	49
	Y46	Trim		Extra Cost Deluxe Trim - Includes A51, B18, B25, D15, U37, Y18 Available with Trim Combinations 690, 691, 693, 698	49
	Y47	Trim		Extra Cost "Limited" Trim - Includes B94 Exterior Ornamentation "Limited" and Available only with Trims 651, 654, 658, 668	48439
		55	*1	Sales Billing Procedure	
		55	*2	Service Billing Procedure	
		55	*3	Training Service Billing Procedure	
		55	*4	Dealer Demo or Zone Company Car	
		55	*5	Fleet Order	
		55	*6	Retail Order	
		55	*7	Flint Factory Delivery	
		55	*8	Special Car Order	
		55	*9	*7 + *8	
		55	*D	Division #01 Dealer Delivery	

Prepared by
E. Maul
For
L. W. Mick
Prod. Prog. Sec.

NOTE: Models 44855-65 or Series 448 are carried on this list for information only. As a Sales model, they are available only by ordering Models 44455-65 with Applique Option V5.

*Indicates revisions since issue of February 23, 1968.

E. Maul
Extension 6-1701

DAVE GRAHAM INC. - 2015
ALL RIGHTS RESERVED

1386163

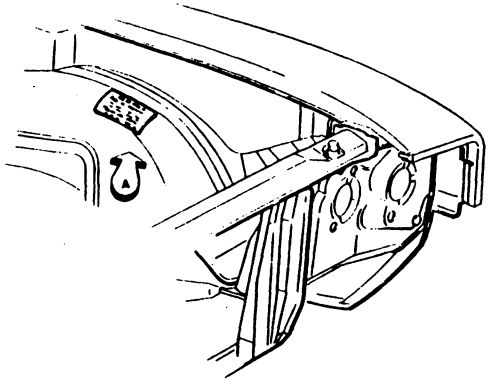

ALL "A" SERIES

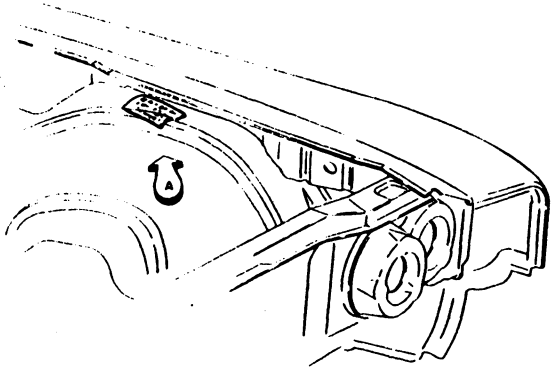

ALL "B & C" SERIES

NOTE
PLACE LABELS IN APPROXIMATE LOCATIONS ON WHEEL HOUSE PANELS AS SHOWN

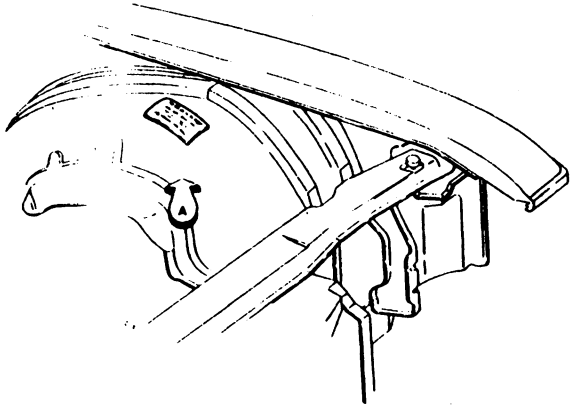

ALL "E" SERIES

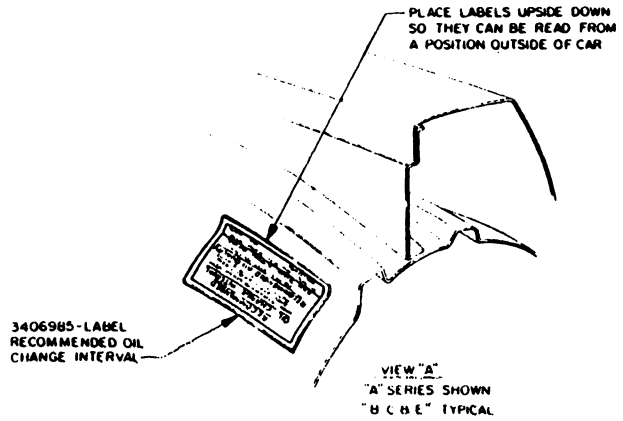

VIEW "A"
"A" SERIES SHOWN
"B C & E" TYPICAL

(A) NOTE
THIS DRAWING APPLYS TO CARS SHIPPED TO CANADA ONLY

DATE	SYM	REVISION RECORD	AUTH	DR	CK
8-18-67	A	NOTE ADDED	[illegible]	[illegible]	[illegible]

DO NOT SCALE — REPORT ERRORS
TOLERANCES UNLESS OTHERWISE SPECIFIED
± ALLOWED ON TWO PLACE DECIMALS
± .010 ALLOWED ON THREE PLACE DECIMALS
COMMERCIAL TOLERANCES APPLY TO STANDARD PARTS - ROLLED SECTIONS - SHEET METAL GAGES - DRILLED AND PUNCHED HOLES
BURR ALL DRILLED HOLES COUNTERSINK ALL TAPPED HOLES .030 X 60°

DWG DATE	SCALE	DR W GRADY
7-20-67	-/-	CK R. Hauser
FIRST USED 1968 - "ALL"		APPR
REFERENCE		APPR
		APPR

(EXPORT ONLY, SEE NOTE)
NAME ENGINE OIL CHANGE LABEL INSTALLATION
PART NO 1386163 — PAGE NO. 0-14.1

1386163

DAVE GRAHAM INC. - 2015
ALL RIGHTS RESERVED

TRANSMISSION THREE AND FOUR SPEED SYNCHROMESH

TRANSMISSION - AUTOMATIC

Oil Pan and Gasket
Adjustment Hole Covers and Gaskets
Breather Assembly
Speedo Drive Gear
Governor Assembly
Vacuum Modulator Assembly
Transmission Oil Cooler Lines & Connectors
(We do not recommend changing any other operating part of the transmission).

REAR AXLES

Brake Backing Plate Assemblies
Brake Drums
Wheel Cylinders, Brake Shoes, Etc.
Axle Shafts for Loose Wheel Studs

Differential Carrier Change is not permissible.

DAVE GRAHAM INC. - 2015
ALL RIGHTS RESERVED

1968 BUICK ASSEMBLY INSTRUCTION MANUAL

SPECIAL - SKYLARK 43000 - 44000 SERIES

BODY - INSTRUMENT PANEL & AIR CONDITIONING (SECTION 1)

	PAGES
Air Cond. Test Procedure - Chart All Series (2 pages)	1-1.2 1-1.3
Air Cond. Control Cable Usage & Identification Color Code	1-1.4
Dash Units - Defroster Outlets - Covers - Plate & Tape Installation (Non - Heater Jobs)	1-2.1
Car Body & Sheet Metal Installation (2 pages)	1-3.1 1-3.2
Roof Luggage Carrier - Wagons	1-4.1
Console Installation & Wire Routing Requirements - Auto Trans. (2 pages)	1-5.1 1-5.2
Consolette Installation - 3-Speed & 4-Speed Manual Trans. (2 pages)	1-6.1 1-6.2
Console-Short Front Seat Center Compartment - Column Shift	1-7.1
Instrument Panel Installations Ash Tray - Cluster - Switches - Monograms Emblems - Tire Pressure Label & Misc. (4 pages)	1-8.1 thru 1-8.4
Heater & Defroster Installations Controls - Blower - Hoses & Clamps (4 pages)	1-9.1 thru 1-9.4
Vacuum Tube Routing Composite - Schematic	1-10.1
Windshield Washer & Wiper Install. (3 pages)	1-12.1 thru 1-12.3
Mirror - Rear View - STD & Remote Control - Outside Installation	1-13.1
Protect-O-Plate and Installation Requirements	1-14.1
*Vehicle Identification Plate (Tab Sheet)	1-15.1
Air Conditioning Installation Instrument Panel Units Dash Units 350 - 400 cu. in. engine (V-8) 250 cu. in. engine (L-6) Engine Units (10 pages)	1-28.1 thru 1-28.10

*8-15-67

PART NUMBER- 1383770

PAGE NUMBER- 1-1.0

DAVE GRAHAM INC. - 2015
ALL RIGHTS RESERVED

DAVE GRAHAM INC. - 2015
ALL RIGHTS RESERVED

1386392

THE SUB ASSEMBLIES AS SHIPPED FOR FINAL ASSEMBLY WILL BE DEHYDRATED, LEAK TESTED, AND CAPPED. THE COMPRESSOR WILL CONTAIN A HOLDING CHARGE.

CAUTION: SAFETY GOGGLES MUST BE WORN BY PERSONNEL CHARGING, OPENING, OR EVACUATING THE SYSTEM, TO PROTECT EYES FROM THE PRESSURIZED REFRIGERANT.

FOLLOWING IS A LIST OF PRECAUTIONARY MEASURES TO BE TAKEN PRIOR TO AND DURING ASSEMBLY OPERATIONS OF THE FINAL UNIT, AND TESTING REQUIREMENTS.

A. GENERAL PRECAUTIONS

1. ALL SUB ASSEMBLIES SHIPPED DEHYDRATED AND SEALED TIGHT ARE TO REMAIN SEALED UNTIL JUST PRIOR TO MAKING CONNECTIONS.
2. ALL SUB ASSEMBLIES MUST BE AT ROOM TEMPERATURE BEFORE UNCAPPING. THIS PREVENTS THE ENTRANCE OF AIR INTO THE SYSTEM AND FORMING CONDENSATION.
3. UNITS MUST NOT REMAIN OPEN LONGER THAN 15 MINUTES. IF TIME IS TO BE LONGER, UNITS MUST BE RECAPPED. THIS IS ESPECIALLY IMPORTANT AT END OF SHIFTS ON PARTIALLY ASSEMBLED JOBS.
4. RECEIVER DEHYDRATOR MUST NEVER BE LEFT UNCAPPED MORE THAN 5 MINUTES TO ASSURE MAXIMUM MOISTURE PROTECTION TO THE SYSTEM. RECEIVER DEHYDRATOR LEFT UNCAPPED FOR LONGER PERIODS MUST BE REPLACED AND NOT USED.
5. COMPRESSOR IS SHIPPED WITH TEN AND ONE HALF (10.5) FLUID OUNCES OF REFRIGERANT OIL 9-465-xb WHICH IS DISTRIBUTED THROUGH THE SYSTEM AFTER OPERATION IS STARTED. THE COMPRESSOR CONTAINS A HOLDING CHARGE OF 80% NITROGEN AND 20% REFRIGERANT 12.
6. COMPRESSOR SHAFT MUST NOT BE ROTATED UNTIL THE SYSTEM IS ENTIRELY ASSEMBLED AND CONTAINS AT LEAST 3 LBS. OF REFRIGERANT 12.
7. DURING ALL OPERATIONS, NECESSARY PRECAUTION MUST BE TAKEN TO KEEP THE SYSTEM CLEAN AND DRY. PREVENT ANY DIRT OR MOISTURE FROM GETTING ON OR IN THE CONNECTIONS. IT IS PARTICULARLY IMPORTANT THAT NO DIRT OR MOISTURE GET INTO THE SYSTEM.

B. ASSEMBLY

1. UTMOST PRECAUTIONS MUST BE TAKEN TO PREVENT DAMAGE TO FITTINGS AND "O" RINGS. EVEN MINUTE DAMAGE CAN CAUSE LEAKS.
2. ANY DIRT OR GREASE ON FITTINGS MUST BE WIPED OFF WITH A CLEAN ALCOHOL DAMPENED CLOTH. DO NOT USE CHLORINATED SOLVENTS. IF DIRT, GREASE, OR MOISTURE CANNOT BE READILY REMOVED FROM INSIDE PIPES, THEY MUST BE REPLACED.
3. SEALING CAPS ARE TO BE REMOVED FROM UNITS JUST PRIOR TO MAKING CONNECTIONS FOR FINAL ASSEMBLY.
4. DISCARD SHIPPING "O" RINGS RECEIVED ON PIPES AND INSTALL NEW "O" RINGS COATED WITH CLEAN REFRIGERANT OIL. "O" RINGS RECEIVED WITH NEW COMPRESSOR MAY BE REUSED. "O" RING CONTAINERS MUST BE COVERED WHEN NOT IN USE, FREQUENTLY CLEANED AND CONTAIN A SMALL QUANTITY OF PARTS TO PREVENT OVER SOAKING RESULTING IN SWELLING OVER A LONG PERIOD OF TIME.
5. MANDATORY, WHEN TIGHTENING OR LOOSENING PIPE FITTINGS, ALWAYS USE TWO (2) WRENCHES. AN OPEN END MUST BE USED TO HOLD THE "O" RING SEAT STATIONARY WITH A TORQUE WRENCH FOR TIGHTENING.

PIPE CONNECTING NUT TORQUE. "O" RING TYPE CONNECTIONS

METAL PIPE O.D	STEEL PIPE TORQUE FT. LBS.	ALUM. PIPE TORQUE FT. LBS.
1/4	10 - 15	5 - 7
3/8	30 - 35	11 - 13
1/2	30 - 35	15 - 20
5/8	30 - 35	21 - 27
3/4	30 - 35	28 - 33

NOTE: IN CASE OF CONNECTIONS BETWEEN STEEL AND ALUMINUM, THE TORQUE SPECIFIED FOR ALUMINUM MUST BE USED.

6. CHECK AIR GAP BETWEEN CLUTCH ARMATURE PLATE AND PULLEY, GAP SHOULD BE .022 - .057 INCH.
7. IN ASSEMBLY, CARE MUST BE EXERCISED TO BE SURE THAT METAL PIPES ARE NOT BENT OR MUTILATED THROUGH CARELESSNESS, OR DELIBERATELY BENT TO FACILITATE ANOTHER OPERATION.
8. ROUTE FLEXIBLE HOSES AND TIGHTEN FITTINGS SO THAT HOSES ASSUME NATURAL CURVES, FREE OF TWIST OR STRAIN. TWISTED OR KINKED HOSES ARE APT TO TRANSMIT NOISE.
9. COMPLETED ASSEMBLIES ARE TO BE CHECKED FOR REFRIGERANT LINES GROUNDING OUT ON SHEET METAL COMPONENTS. ANY DIRECT CONTACT OF LINES AND SHEET METAL TRANSMITS NOISE AND MUST BE ELIMINATED.

C. EVACUATION AND INITIAL LEAK TEST

1. INSTALL CHARGING MANIFOLD GAUGE SET LINES TO GAUGE FITTINGS ON SUCTION THROTTLING VALVE AND DISCHARGE LINE ON BACK OF COMPRESSOR.
2. OPEN GAUGE VALVES, PULL VACUUM UNTIL STEADY READING OF A MINIMUM OF 25 MM HG ABSOLUTE SYSTEM PRESSURE IS OBTAINED. AFTER A 15 SECOND HOLD TIME THE SYSTEM PRESSURE MUST NOT EXCEED 29 MM HG ABSOLUTE PRESSURE.

SYSTEM PRESSURE - THE LEVEL OF EVACUATION OF THE VEHICLES AIR CONDITIONING SYSTEM ONCE THE VACUUM SOURCE HAS BEEN REMOVED.

HOLD TIME - ELAPSED TIME WHICH OCCURS BETWEEN VACUUM DISCONNECT AND CHARGE CONNECT.

FOR A LONGER THAN 15 SECOND HOLD TIME, THE SYSTEM PRESSURE MAY BE ALLOWED TO RISE TO THE VALUES SHOWN BELOW IN THE TABLE.

ELAPSED TIME BETWEEN EVACUATION AND CHARGE	ACCEPTABLE EVACUATION LEVEL (MM HG) PER EVACUATION AND CHARGE SPEC.	P.C.V. SET POINTS ACCEPT	REJECT
15-30 SECONDS	25 MM HG	25 MM HG	30 MM HG
31-60	30 MM HG	27 MM HG	32 MM HG
61-90	35 MM HG	32 MM HG	37 MM HG
91 SECONDS & OVER	40 MM HG	37 MM HG	42 MM HG

IF THE SYSTEM IS REJECTED, A LEAK IS INDICATED. CHECK ALL CONNECTIONS IN SYSTEM FOR PROPER TORQUE AND ADD SMALL AMOUNT OF REFRIGERANT 12 TO SYSTEM.

CHECK FOR LEAK WITH G.E. ELECTRONIC DETECTOR OR EQUIV. (HALOGEN TORCH MAY BE USED IN THE FIELD.)

IF LEAK PERSISTS AFTER CONNECTIONS ARE PROPERLY TORQUED, CHECK FOR PROPER "O" RING GASKET INSTALLATION AND RETORQUE CONNECTIONS.

REPEAT PROCEDURE UNTIL ALL LEAKS ARE CORRECTED.

D. CHARGING

1. CHARGING SHOULD BE CONDUCTED AT 70° MINIMUM TEMPERATURE.
2. ALWAYS PURGE AIR FROM LINES BEFORE CHARGING.
3. CHARGE SYSTEM WITH SPECIFIED CHARGE OF REFRIGERANT 12. (SEE CHART) BY OPENING HIGH AND LOW SIDE VALVES ON GAUGE SET.

3.75 LBS. - SERIES 43-44AU
4.25 LBS. - SERIES 45-46-46-44AU

4. IF FULL CHARGE DOES NOT ENTER SYSTEM PROCEED AS FOLLOWS:

(A) CLOSE HIGH PRESSURE VALVE ON GAUGE SET.
(B) CONNECT COMPRESSOR CLUTCH.
(C) START ENGINE AND OPERATE AT 1500 R.P.M.
(D) TURN ON AIR CONDITIONING CONTROLS FOR MAXIMUM COOLING.
(E) AFTER FULL CHARGE HAS ENTERED SYSTEM, CLOSE LOW SIDE VALVE.

5. AFTER FIVE (5) MINUTES OPERATION, CHECK FOR CLEAR SIGHT GLASS. IF BUBBLES SHOW OR GLASS APPEARS MILKY, AIR IS IN THE SYSTEM, EXCESSIVE RESTRICTION IN A LINE, OR INSUFFICIENT CHARGE IS INDICATED AND MUST BE CORRECTED.

CAUTION: DO NOT OVERCHARGE AS THIS WILL CAUSE EXCESSIVE HEAD PRESSURE.

6. DISCONNECT CHARGING LINES AND INSTALL CAPS ON SERVICE VALVES.

RETIGHTEN DISCHARGE LINE CAP AND S.T.V. CAP TIGHT AS POSSIBLE WITH FINGERS.

E. FINAL LEAK TEST.

1. LEAK DETECTION MUST BE CONDUCTED WITH ENGINE OFF, AWAY FROM EXHAUST FUMES AND EXCESSIVE BLASTS OF AIR OR WINDY AREA.
2. (8) THE LEAK DETECTION PROBE MUST BE SLOWLY MOVED AROUND UNDER THE ENTIRE CONNECTION OR AREA CHECKED.
3. A LEAKING CONNECTION MUST BE TIGHTENED TO SPECIFIED TORQUE (DO NOT OVERTORQUE), WIPED FREE OF OIL AND BLOWN DRY WITH CLEAN DRY AIR FOR RECHECK.

NOTE: THE PRESENCE OF OIL AT A CONNECTION MAY INDICATE A FALSE LEAK.

4. IF A CONNECTION STILL LEAKS AFTER PROPER TORQUE HAS BEEN APPLIED, IT MUST BE OPENED FOR INSPECTION AND CORRECTION.
5. CHECK TO MAXIMUM LEAK RATE OF ONE (1) POUND IN FIFTY (50) YEARS AT ALL POINTS EXCEPT COMPRESSOR SEAL WITH ONE (1) POUND IN FIVE (5) YEARS.

F. P.O.A. SUCTION THROTTLE VALVE CHECK

THE OPERATION OF THE P.O.A. VALVE IS AS FOLLOWS.

1. INSTALL GAUGE SET, RUN ENGINE AT 2000 R.P.M., SET CONTROLS FOR MAXIMUM COOLING AND OPERATE FOR APPROX. 3 MINUTES. REFER TO FUNCTIONAL CHECK FOR CORRECT PRESSURES. IF PRESSURES DO NOT AGREE WITH FUNCTIONAL CHECK, REFER TO SERVICE MANUAL FOR DIAGNOSIS.

G. REFRIGERANT OIL CHECK AND REPLACEMENT

THE PROPER OIL CHARGE MUST BE MAINTAINED IN THE SYSTEM. TO PREVENT OIL LOSS THE ASSEMBLY PRECAUTIONS ON COMPRESSOR HANDLING SHOWN ON THE INSTALLATION DRAWING MUST BE FOLLOWED.

WHEN THE SYSTEM HAS BEEN OPERATED, PART OF THE OIL RECEIVED IN THE COMPRESSOR IS CIRCULATED THROUGHOUT THE SYSTEM. PART OF THIS CIRCULATED OIL WILL REMAIN TRAPPED IN THE EVAPORATOR, CONDENSER AND RECEIVER-DEHYDRATOR. WHENEVER A COMPRESSOR OR OTHER PART OF THE REFRIGERANT CIRCUIT IS REMOVED, THE OIL CONTAINED THEREIN SHOULD BE REPLACED IN THE SYSTEM.

THE FOLLOWING PROCEDURE IS FOR OIL REPLACEMENT.

1. COMPRESSOR
   a. REMOVE DISCHARGE COMPRESSOR OIL FITTING, DRAIN AND MEASURE THE AMOUNT OF OIL IN THE DEFECTIVE COMPRESSOR.
      (NOTE: DO NOT RECHARGE COMPRESSOR WITH OIL IF IT WILL BE RETURNED TO THE VENDOR).
   b. DRAIN ALL OIL FROM NEW COMPRESSOR.
   c. RECHARGE NEW COMPRESSOR WITH THE SAME AMOUNT OF OIL THAT WAS DRAINED FROM THE DEFECTIVE COMPRESSOR.
   d. THIS PROCEDURE MUST BE FOLLOWED TO INSURE THAT COMPLETE SYSTEM IS NOT OVER CHARGED WITH OIL.
      NOTE: IT MAY BE NECESSARY TO ROTATE THE COMPRESSOR PULLEY BY HAND TO INSURE ALL OIL IS PUMPED OUT.
2. OTHER COMPONENT REPLACEMENT:
   a. OPERATE THE SYSTEM AT ENGINE IDLE SPEED FOR APPROX. FIVE MINUTES TO RETURN AS MUCH OIL AS POSSIBLE TO THE COMPRESSOR, PRIOR TO REPLACEMENT OF A COMPONENT. PROVIDING SYSTEM HAS NOT PREVIOUSLY LOST ITS CHARGE.
   b. ADDITIONS OF OIL INTO NEW COMPONENTS SHOULD BE MADE IMMEDIATELY PRIOR TO ASSEMBLY OF THE COMPONENT INTO THE CAR. THE OIL SHOULD BE ADDED IN SUCH A MANNER THAT THERE WILL BE NO LOSS OF OIL DURING THE INSTALLATION. WHEN POSSIBLE, OIL MAY BE ADDED DIRECTLY TO THE COMPRESSOR.
3. OIL ADDITION REQUIREMENT WITH EACH COMPONENT REPLACEMENT IS AS FOLLOWS:

EVAPORATOR	- 2 FLUID OUNCES
CONDENSER	- 1 FLUID OUNCE
RECEIVER-DEHYDRATOR	- 1 FLUID OUNCE

CAUTION: DO NOT ALLOW REFRIGERANT OIL TO BECOME CONTAMINATED. STORE IN A CLOSED CONTAINER.

H. EQUIPMENT MAINTENANCE:

1. THE PRESSURE GAUGES MUST BE FREQUENTLY CHECKED FOR ACCURACY. TWICE A WEEK CHECK IS RECOMMENDED.
2. THE EVACUATION AND CHARGING LINE GASKETS MUST BE FREQUENTLY REPLACED TO INSURE PROPER SEAL OF CONNECTION.
3. TO INSURE PROPER LEAK DETECTION, THE LEAK DETECTION EQUIPMENT MUST BE FREQUENTLY CHECKED FOR CORRECTION CALIBRATION. TWICE PER SHIFT, ONCE EVERY FOUR (4) HOURS IS RECOMMENDED.

DATE	SYM	REVISION RECORD	AUTH	DR	CK

(5)

DO NOT SCALE — REPORT ERRORS
TOLERANCES UNLESS OTHERWISE SPECIFIED
.X ALLOWED ON TWO PLACE DECIMALS
.XXX ALLOWED ON THREE PLACE DECIMALS
COMMERCIAL TOLERANCES APPLY TO STANDARD PARTS, MACHINED SURFACES, SHEET METAL GAGES, DRILLED AND PUNCHED HOLES.
BURR ALL DRILLED HOLES. COUNTERSINK ALL TAPPED HOLES .030 X 90°

DWG. DATE 8-17-61	SCALE	DR. C. MANOS	
FIRST USED 1968 - ALL SERIES		CK. W. MOTLEY	
REFERENCE		APPR.	
		APPR.	
MATERIAL SPEC		APPR.	

NAME
CHART - AIR CONDITIONING PROCEDURE

PART NO. 1386392 — SHEET 1 OF 2 SHEETS — PAGE NO. 11.2

1386392

1366392

I. CONTROL CHECK:

A CONTROL OPERATION AND AIR FLOW CHECK MUST BE CONDUCTED PRIOR TO FUNCTIONAL TEST.

WITH ENGINE RUNNING, CHECK THE FOLLOWING:

1. CHECK AIR FLOW FROM THE THREE INSTRUMENT PANEL OUTLETS
   CHECK BLOWER SPEEDS.
   a. HEATER FOUR SPEEDS
   b. A/C FOUR SPEEDS.
3. SELECTOR CONTROL MOVEMENT
   a. RECIR TO NORMAL AIR FLOW WITH AUDIBLE AIR NOISE CHANGE.
   b. VENT POSITION TURNS OFF COMPRESSOR CLUTCH AND PROVIDES UNHEATED OR HEATED AIR FLOW THRU A/C OUTLETS.
   c. HEAT POSITION PROVIDES AIR FLOW THRU HEATER OUTLETS.
4. DEFROSTER CONTROL DIRECTS HEATER AIR THRU DEFROSTER OUTLETS.
5. TEMPERATURE CONTROL MOVEMENT
   a. WARM POSITION PROVIDES WARM AIR FROM SYSTEM.
   b. COOL POSITION PROVIDES AMBIENT OR COOLED AIR FROM SYSTEM.

MALFUNCTIONS IN CONTROL OPERATION AIR FLOW MUST BE CORRECTED BEFORE CONDUCTING FUNCTIONAL TEST.

J. FUNCTIONAL TEST

EACH SYSTEM MUST BE CHECKED FOR PROPER OPERATION AS FOLLOWS.

TEST CONDITIONS.

1. CONNECT GAUGES TO SCHRADER VALVE FITTINGS.
   a. COMPRESSOR HEAD PRESSURE, USE FITTING ON DISCHARGE LINE AT REAR OF COMPRESSOR.
   b. EVAPORATOR PRESSURE, USE FITTING ON SUCTION THROTTLE VALVE
2. HOOD OPEN & CAR DOORS CLOSED.
3. CONTROL SET FOR MAXIMUM COOLING - HIGH BLOWER AND PRODUCTION RECIRCULATION.
4. TEST MUST BE CONDUCTED IN AN AREA WITH 70° F OR ABOVE STABLE AMBIENT TEMPERATURES.
5. AN AUXILIARY AIR FLOW OF APPROXIMATELY 1,100 F. P. M. OF AMBIENT AIR SHOULD BE DIRECTED OVER THE ENTIRE SURFACE OF CONDENSER.
6. AMBIENT AIR TEMPERATURE AND PER CENT RELATIVE HUMIDITY IS TO BE MEASURED IN THE AMBIENT AIR STREAM OF THE AUXILIARY FAN IN FRONT OF THE CONDENSER.
7. ENGINE SET AT 2000 R. P. M.

K. SEE CHART FOR READINGS THAT CAN BE EXPECTED FROM A NORMAL FUNCTIONING UNIT.

SERIES	TEST NO. 1 AMBIENT TEMP. °F.	EVAPORATOR PRESSURE P.S.I.G. (AT P.O.A.)	COMPRESSOR HEAD PRESSURE P.S.I.G.	OUTLET TEMP. °F. LEFT	OUTLET TEMP. °F. RIGHT	TEST NO. 2 AMBIENT TEMP °F.	HUMIDITY	ENGINE R.P.M.	EVAPORATOR PRESSURE P.S.I.G. (AT P.O.A.)	COMPRESSOR HEAD PRESSURE P.S.I.G.	OUTLET TEMP. °F. LEFT	OUTLET TEMP. °F. RIGHT
43000 64000	80	28 - 30	230 - 245	40 - 45	40 - 45	80	DRY	550	28	180	44	46
	90	28 - 30	240 - 280	45 - 49	45 - 49	80	HUMID	550	32	200	46	49
	100	28 - 30	260 - 320	48 - 52	48 - 52	90	DRY	540	32	200	48	51
	100	28 - 30	300 - 340	51 - 55	51 - 55	90	HUMID	700	35	230	52	53
						100	DRY	540	35	240	53	55
						100	HUMID	650	35	260	54	56
						110	DRY	775	35	310	54	56
						110	HUMID	975	35	340	56	58
45000 46000 48000	80	28 - 30	180 - 240	42 - 44	43 - 45	80	DRY	540	29	180	47	43
	90	28 - 30	200 - 270	44 - 46	45 - 51	80	HUMID	540	30	210	48	49
	100	28 - 30	230 - 310	46 - 50	47 - 52	90	DRY	600	31	230	50	49
	110	28 - 30	270 - 335	48 - 53	49 - 55	90	HUMID	700	35	230	51	53
						100	DRY	650	35	250	51	53
						100	HUMID	750	35	270	52	54
						110	DRY	700	35	290	57	53
						110	HUMID	850	35	310	56	57
64000	70	28 - 30	200 - 250	44 - 46	42 - 45	70	DRY	700	29	150	42	44
	80	28 - 30	220 - 275	45 - 48	45 - 48	70	HUMID	700	29	160	44	44
	90	28 - 30	250 - 310	46 - 49	46 - 49	80	DRY	700	29	170	44	44
	100	28 - 30	275 - 330	48 - 54	49 - 54	80	HUMID	700	31	190	46	49
	110	28 - 30	300 - 350	50 - 55	50 - 55	90	DRY	750	31	200	46	46
						90	HUMID	950	35	240	54	54
						100	DRY	800	35	250	52	52
						100	HUMID	1000	35	280	56	56
						110	DRY	1275	35	290	54	54
						110	HUMID	1050	35	310	58	58

* FOR TEST NUMBER 1 ALL SERIES

THE LOWER OUTLET TEMPERATURES CAN BE ACHIEVED ON DRY DAYS, AND THE HIGHER ON HUMID DAYS.
IF THE EVAPORATOR PRESSURE IS NOT CORRECT FOR GIVEN AMBIENT TEMPERATURES (SIGNIFICANTLY DIFFERENT) REFER TO SERVICE MANUAL FOR DIAGNOSIS.

** FOR TEST NUMBER 2 ALL SERIES

THIS TEST SHOULD BE RUN ON CARS WHICH PASS TEST NO. 1, BUT DO NOT PERFORM SATISFACTORILY ON THE ROAD. THE TEST CONDITIONS ARE THE SAME AS TEST NO. 1 EXCEPT THE ENGINE SPEED IS ADJUSTED TO THE AMBIENT TEMPERATURE AND HUMIDITY. THE PRESSURES AND OUTLET TEMPERATURES SHOULD BE EQUAL TO OR LOWER THAN THOSE TABULATED. IF READINGS ARE SIGNIFICANTLY HIGHER, SEE THE BUICK SERVICE MANUAL FOR CAUSE AND CORRECTION.

1366392

DO NOT SCALE — REPORT ERRORS
TOLERANCES UNLESS OTHERWISE SPECIFIED
X ALLOWED ON TWO PLACE DECIMALS
X.XXX ALLOWED ON THREE PLACE DECIMALS
COMMERCIAL TOLERANCES APPLY TO STANDARD PARTS - ROLLED SECTIONS - SHEET METAL GAGES - DRILLED AND PUNCHED HOLES
BURR ALL DRILLED HOLES COUNTERSINK ALL TAPPED HOLES USE A BIT

DRG. DATE 8-17-67 | SCALE None | DR C MANUS | CK H FORSYTHE | APPR | APPR | APPR
FIRST USED 1968 ALL SERIES
REFERENCE
MATERIAL SPEC
NAME CHART AIR CONDITIONING PROCEDURE
PART NO 1366392 SHEET 2 of 2 SHEETS | PAGE NO 11.3

DAVE GRAHAM INC. - 2015
ALL RIGHTS RESERVED

SPECIAL - SKYLARK 43000 - 44000 SERIES

CONTROL CABLE IDENTIFICATION & USAGE - CHART

PART NUMBER	COLOR	USAGE	MODELS
*13850)	Green	Outside Air	"A" Heater only (Omit on A/C) *(See 1-9.2 for installation)
*138509)	Red	Temperature	"A" Heater only (Omit on A/C) *(See 1-9.2 for installation)
*138508 2	Blue	Defroster	"A" All *(See 1-92. for installation)
*1385089	Red	Temperature	"A" A/C only (Omit on Htr) *(See 1-11.4 for installation)

*SEE: age 1-11.4 for Control Wire Assembly and Adjustment.

*4-5-67

PART NUMBER- 1383770

PAGE NUMBER- 1-11.4

DAVE GRAHAM INC. - 2015
ALL RIGHTS RESERVED

1383757

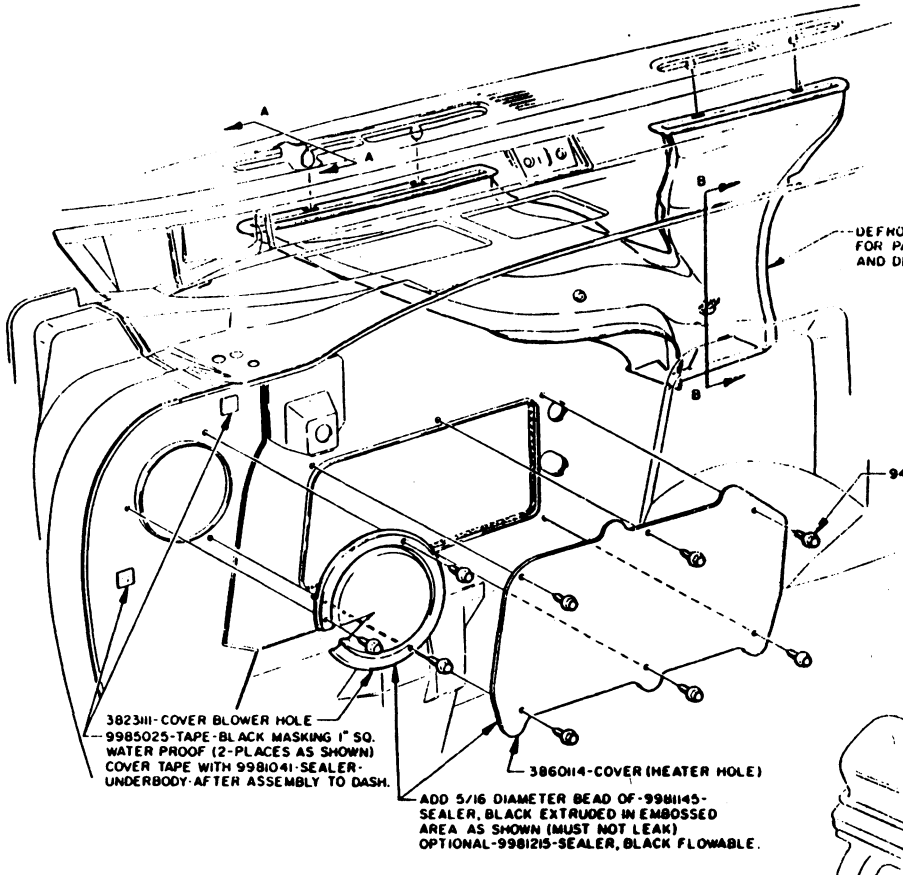

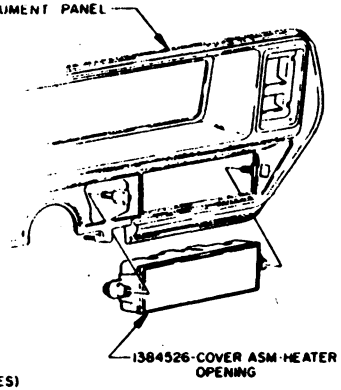

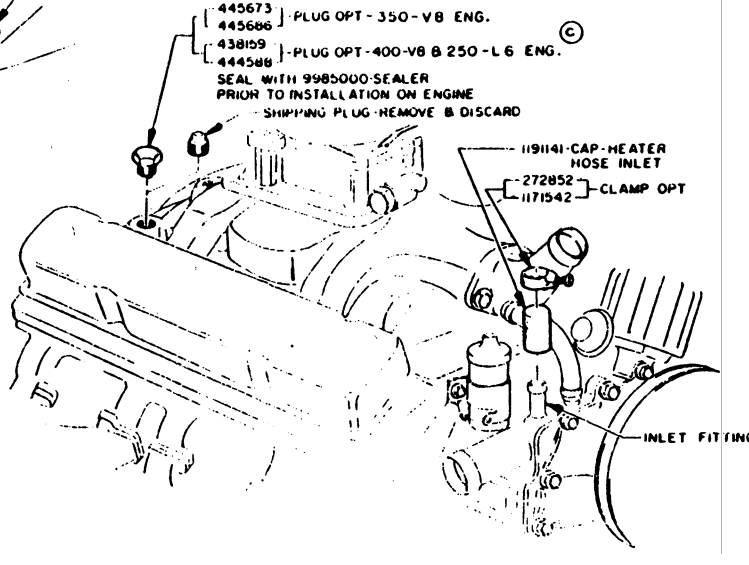

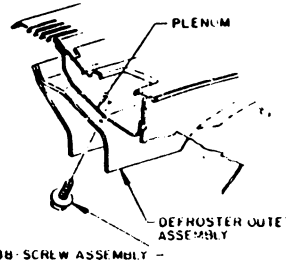



SECTION A-A
(ASSEMBLED)

SECTION

DATE	SYM	REVISION RECORD	APVD	BY	CK
2-26-67	A	1ST RELEASED			
11-30-67	B	9428388-SCREW ASSEMBLY (SELF DRILLING) ADDED & NOTE 3 ADDED			
4-26-68	C	445673 & 445686 OPT PLUG 350 L6 ENGINE USAGE REMOVED - 438159 & 444588 OUT PLUG 350 L6 ENGINE USAGE ADDED	T.S.		

DO NOT SCALE — REPORT ERRORS
TOLERANCES UNLESS OTHERWISE SPECIFIED
x — ALLOWED ON TWO PLACE DECIMALS
x ONE ALLOWED ON THREE PLACE DECIMALS
COMMERCIAL TOLERANCES APPLY TO STANDARD PARTS ROLLED SECTIONS SHEET METAL GAGES-, DRILLED AND PUNCHED HOLES
DEBUR ALL DRILLED HOLES COUNTERSINK ALL TAPPED HOLES 0.30 X 90°

ENG DATE 2-27-67	SCALE --
FIRST USED 1968 A	DR R SNIEK
REFERENCE --	CK L CARPENTER
	APPR
	APPR
	APPR

MATERIAL SPEC

NAME DASH UNITS NON
HEATER INSTALLATION

ENG NO 1383757 | PART NO

1383757

DAVE GRAHAM INC. - 2015
ALL RIGHTS RESERVED

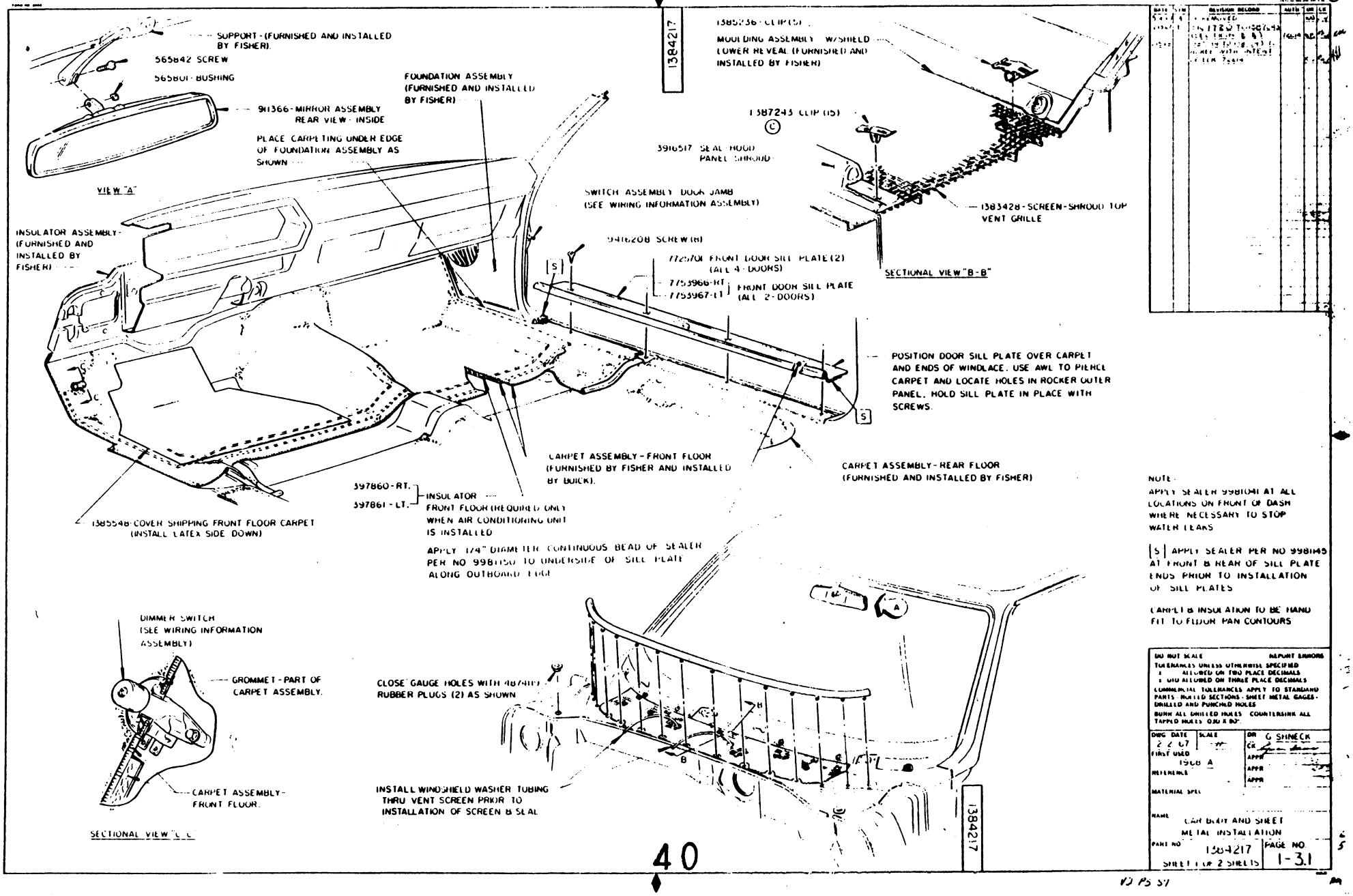

NOTE -
APPLY SEALER 9981041 AT ALL LOCATIONS ON FRONT OF DASH WHERE NECESSARY TO STOP WATER LEAKS

[S] APPLY SEALER PER NO 9981145 AT FRONT & REAR OF SILL PLATE ENDS PRIOR TO INSTALLATION OF SILL PLATES

CARPET & INSULATION TO BE HAND FIT TO FLOOR PAN CONTOURS

DO NOT SCALE — REPORT ERRORS
TOLERANCES UNLESS OTHERWISE SPECIFIED
X ALLOWED ON TWO PLACE DECIMALS
X XXX ALLOWED ON THREE PLACE DECIMALS
COMMERCIAL TOLERANCES APPLY TO STAMPED PARTS - ROLLED SECTIONS - SHEET METAL GAGES - DRILLED AND PUNCHED HOLES
BURR ALL DRILLED HOLES COUNTERSINK ALL TAPPED HOLES .030 X 82°

DWG DATE 2 2 67	SCALE -	DR G SHINECK	
FIRST USED 1968 A		CK	
REFERENCE		APPR	
		APPR	
MATERIAL SPEC		APPR	

NAME: CAR BODY AND SHEET METAL INSTALLATION
PART NO 1384217 | PAGE NO 1-31
SHEET 1 OF 2 SHEETS

40

DAVE GRAHAM INC. - 2015
ALL RIGHTS RESERVED

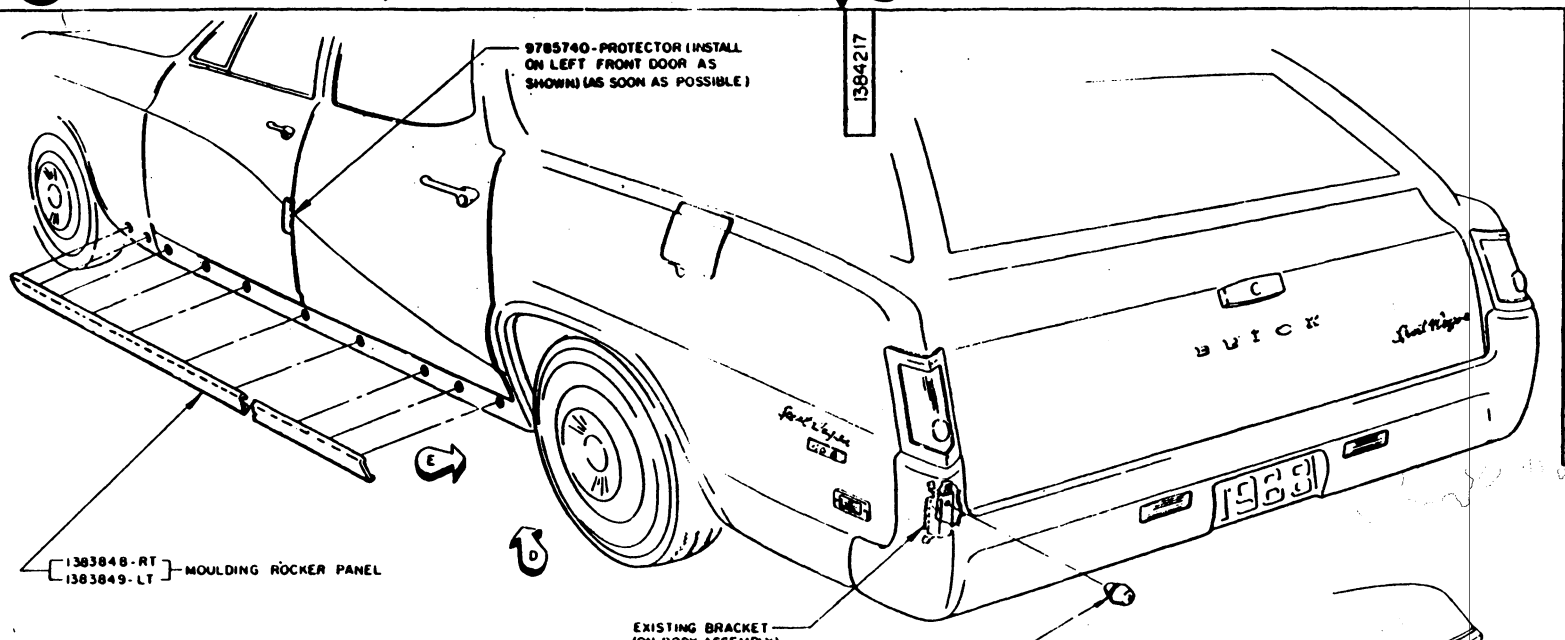

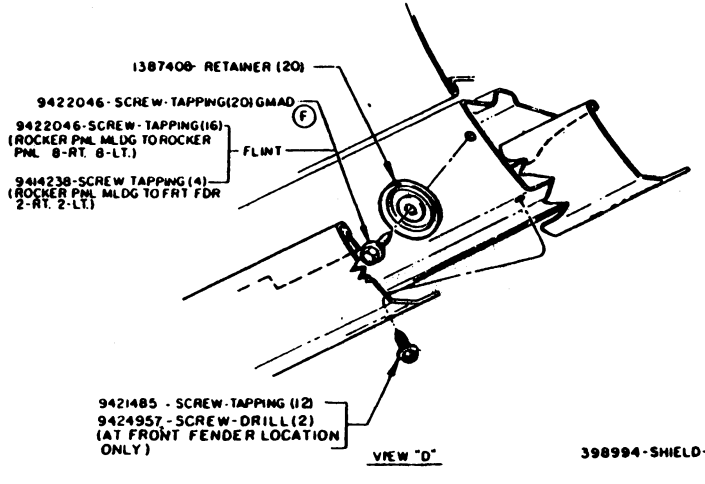

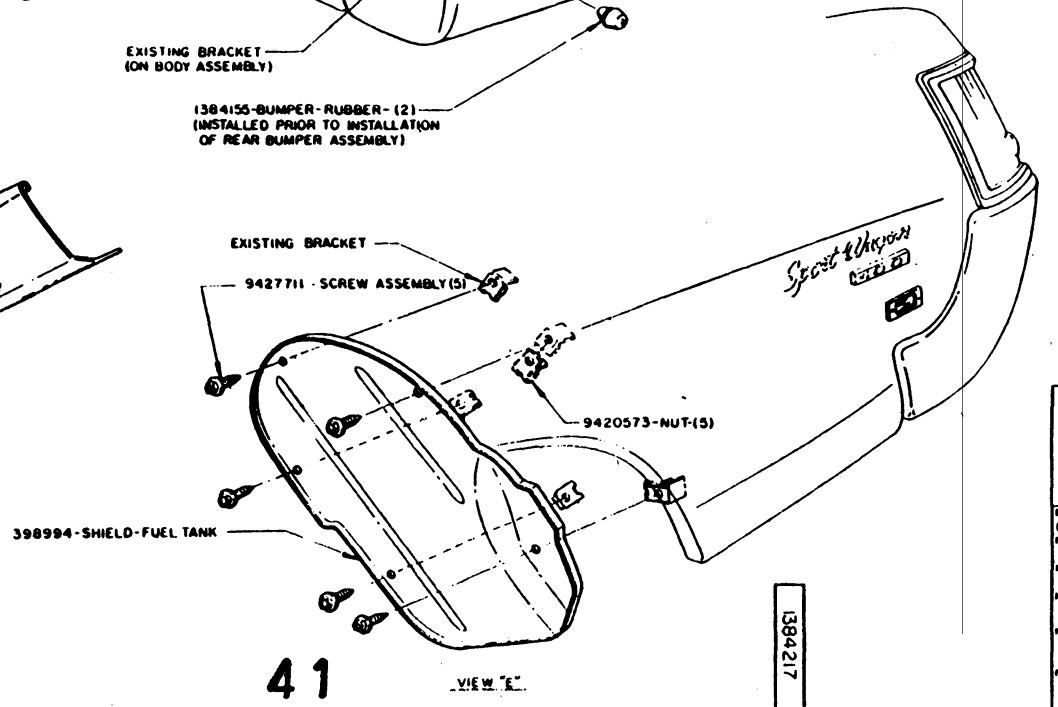

DATE	SYM	REVISION RECORD	APPR.	DR.	CK.
12-6-65	A	5 REMOVED			
4-29-66	B	9422052 TO 9427711			
10-25-66	C	1387402 TO 1387408			
12-16-66	D	9422046-SCREW (16) TO (12) & 9424957 SCREW (2) ADDED (FRT FDR)			
3-1-68	E	1387401 TO 1387408			
		9422046-SCREW (16) TO (16) & 9414238-SCREW (4) ADDED (FLINT ONLY)			

DO NOT SCALE — REPORT ERRORS
TOLERANCES UNLESS OTHERWISE SPECIFIED
X ALLOWED ON TWO PLACE DECIMALS
X.XXX ALLOWED ON THREE PLACE DECIMALS
COMMERCIAL TOLERANCES APPLY TO STANDARD PARTS - ROLLED SECTIONS SHEET METAL GAGES - DRILLED AND PUNCHED HOLES
BURR ALL DRILLED HOLES COUNTERSINK ALL TAPPED HOLES ON 2 SIDES

DWG. DATE	12-16-66	SCALE	NONE
FIRST USED	1968-A	DR	NOONAN
REFERENCE		CK	
MATERIAL SPEC		APPR	
		APPR	
		APPR	

NAME: CAR, BODY & SHEET METAL INSTALLATION
PART NO: 1384217
PAGE NO: 1 3.2
SHEET 2 OF 2 SHEETS

1384217

41

FLINT, MICH., U.S.A.

DAVE GRAHAM INC. - 2015
ALL RIGHTS RESERVED

DAVE GRAHAM INC. - 2015
ALL RIGHTS RESERVED

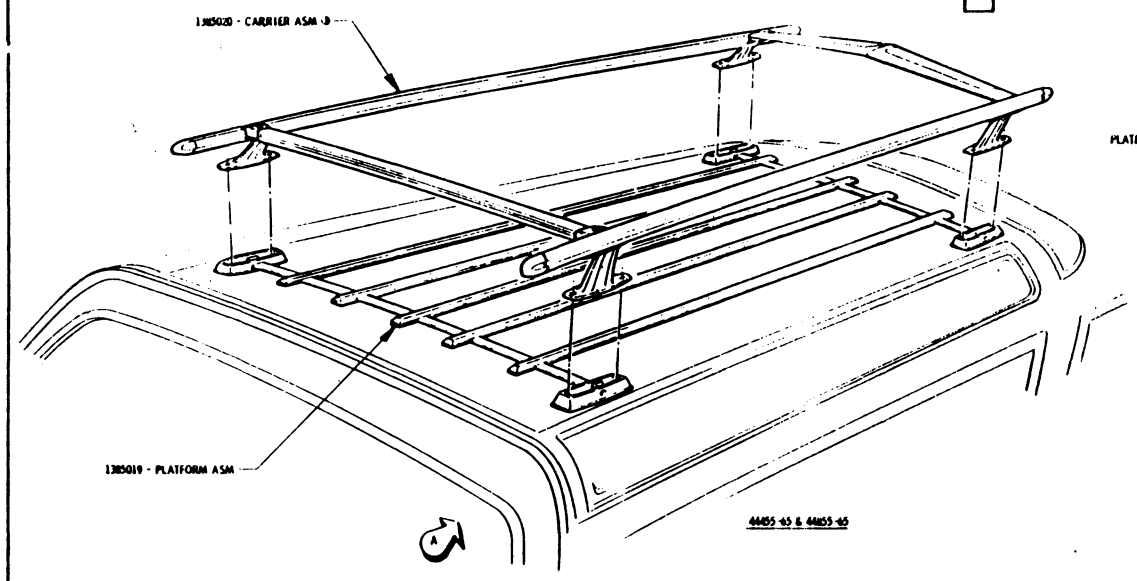

44455-65 & 44855-65

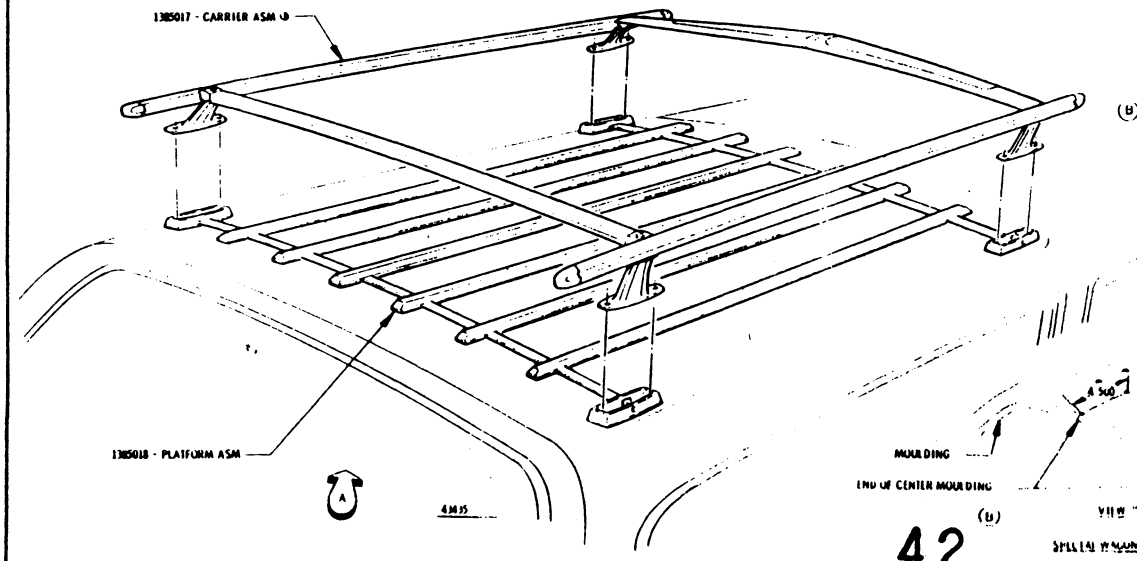

43435

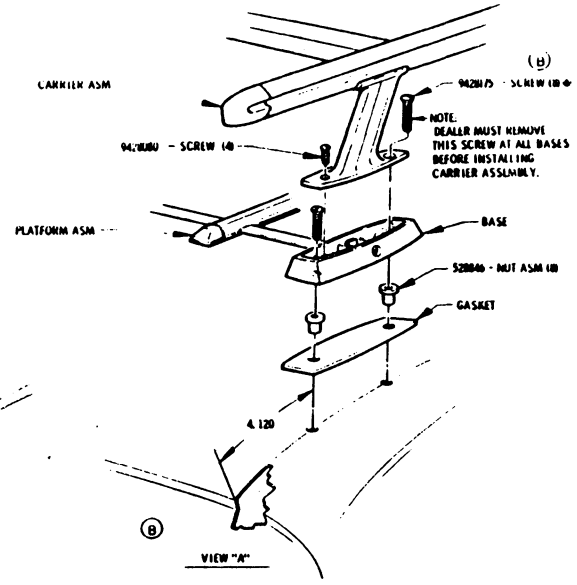

EXTENDED WAGON (44455-65 & 44855-65)

DEALER INSTALLATION INSTRUCTIONS

1. PLACE MASKING TAPE ON BOTTOM OF ALL BASES ON PLATFORM ASSEMBLY TO AVOID SCRATCHING ROOF PANEL.
2. CENTER PLATFORM ASSEMBLY ON ROOF PANEL AND LOCATE FORE AND AFT AS SHOWN IN VIEW "A".
3. TAPE PLATFORM ASSEMBLY IN THIS POSITION AND SCRIBE HOLE LOCATIONS ON ROOF PANEL. THEN REMOVE PLATFORM ASSEMBLY FROM ROOF.
4. CENTER PUNCH AND DRILL .125 DIA. PILOT HOLES THROUGH EACH SCRIBED HOLE AND ENLARGE HOLES TO .500 DIA. BE SURE TO USE A STOP ON DRILLS TO LIMIT DEPTH OF PILOT HOLES AND .500 DIA. HOLES TO .880 TO PREVENT PIERCING THE HEADLING. DE-BURR ALL HOLES.
5. POSITION GASKETS OVER HOLES AND INSERT NUTS THROUGH GASKETS INTO HOLES IN ROOF PANEL.
6. PLACE PLATFORM ASSEMBLY OVER GASKETS AND FASTEN TO ROOF PANEL WITH REAR SCREW OF EACH BASE.
7. POSITION CARRIER ASSEMBLY IN PLACE ON PLATFORM ASSEMBLY AND FASTEN AS SHOWN IN VIEW "A". TIGHTEN ALL SCREWS SECURELY.

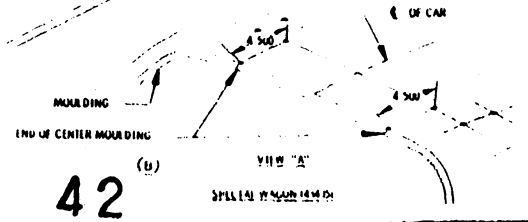

SPECIAL WAGON (43435)

⊕ USE LIGHT PRESSURE ON SCREWS UNTIL THREADS ENGAGE IN THE NUT TO AVOID PUSHING NUT THROUGH ROOF PANEL.

⊕ FURNISHED BY BUICK INSTALLED BY DEALER.

DATE	SYM	REVISION RECORD	AUTH	DR	CK
5 4 67	A	REVISED		CM	
5 11 67	B	9412728 TO 9428175 VIEW "A" FOR 43435 WAGON ADDED & DIMENSION FOR 44455 AND 44855 OF ADDED & DEALER INSTALLATION INSTRUCTIONS REVISED	72178		

DO NOT SCALE — REPORT ERRORS
TOLERANCES UNLESS OTHERWISE SPECIFIED
± ALLOWED ON TWO PLACE DECIMALS
± .010 ALLOWED ON THREE PLACE DECIMALS
COMMERCIAL TOLERANCES APPLY TO STANDARD PARTS - ROLLED SECTIONS - SHEET METAL GAGES - DRILLED AND PUNCHED HOLES.
BURR ALL DRILLED HOLES. COUNTERSINK ALL TAPPED HOLES .030 X 90°

DWG DATE 4 27 67	SCALE ~	DR R McKEE
FIRST USED 1968 A		CK R P Stewart
REFERENCE		APPR
		APPR
		APPR

MATERIAL SPEC
STATION WAGONS

NAME
ROOF LUGGAGE CARRIER INSTALLATION

PART NO	PAGE NO.
1385065	1-4.1

1385065

42

GENERAL MOTORS CORPORATION
FLINT, MICH. U.S.A.

1383945

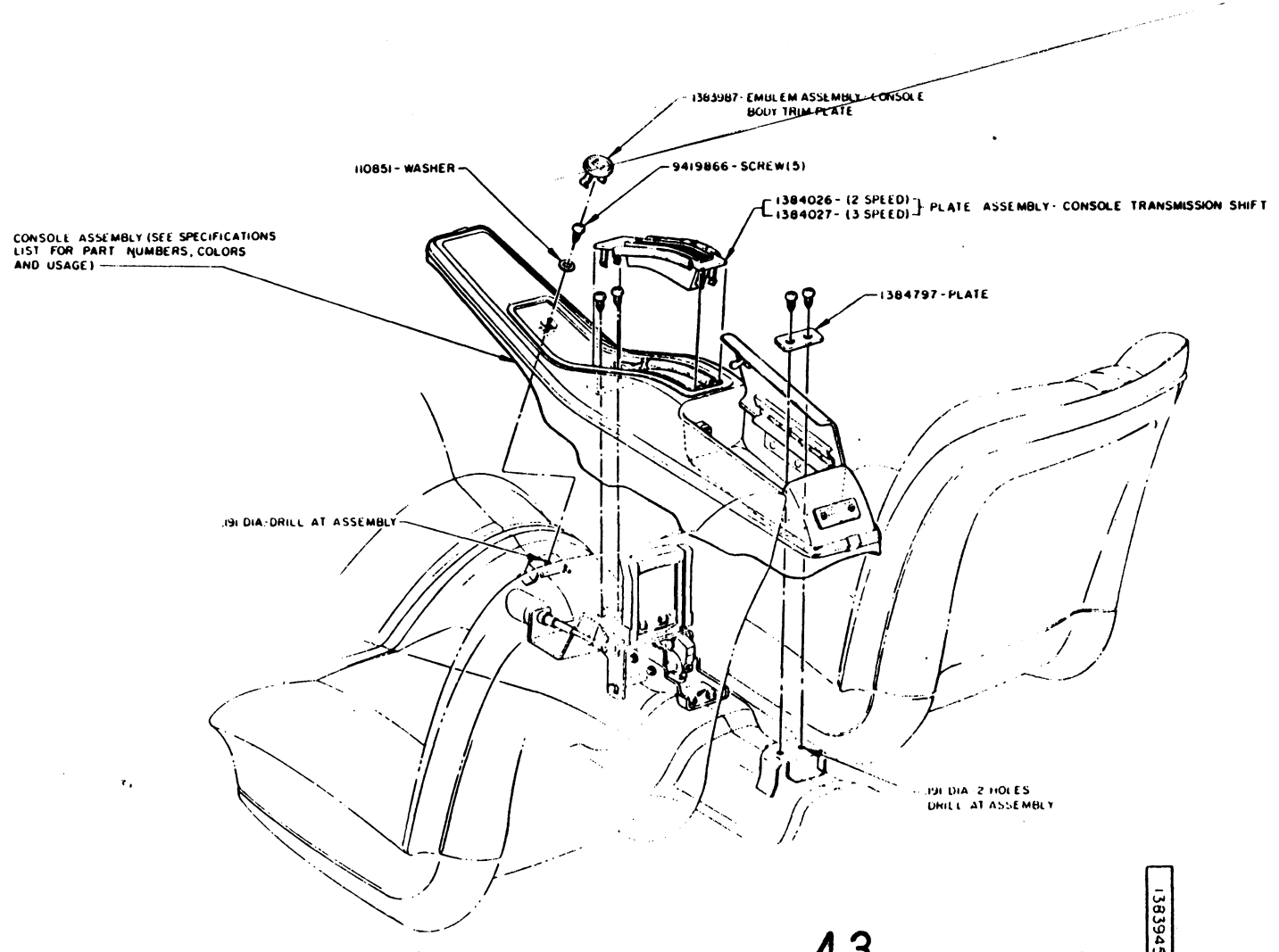

43

1383945

DATE	SYM	REVISION RECORD	AUTH	DR	CK
11-15-66	B	FROM 2 SHTS TO 3 SHTS			

DO NOT SCALE — REPORT ERRORS

TOLERANCES UNLESS OTHERWISE SPECIFIED
X ALLOWED ON TWO PLACE DECIMALS
X.XXX ALLOWED ON THREE PLACE DECIMALS
LEMINGTON TOLERANCES APPLY TO STANDARD PARTS - ROLLED SECTIONS - SHEET METAL GAGES - DRILLED AND PUNCHED HOLES
BURR ALL DRILLED HOLES COUNTERSINK ALL TAPPED HOLES USE A 90

DWG DATE 11-15-66	SCALE
FIRST USED 1968 A	DR PENNY
REFERENCE	CK [illegible]
	APPR
	APPR
	APPR

(FLOOR SHIFT AUTO TRANS)

NAME
CONSOLE INSTALLATION

PART NO 1383945
SHEET 1 OF 3 SHEETS

PAGE NO 1-51

DAVE GRAHAM INC. - 2015
ALL RIGHTS RESERVED

1383945

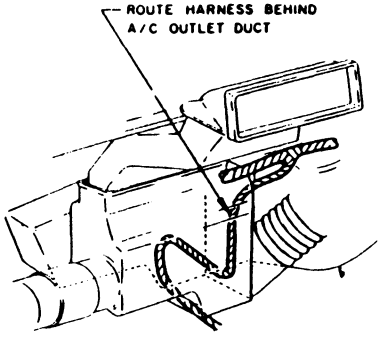

AIR CONDITIONED JOBS

VIEW-A

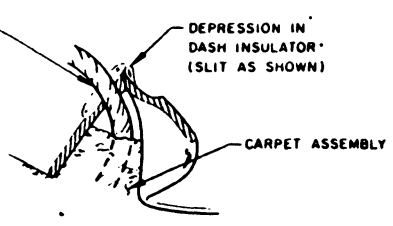

VIEW-B

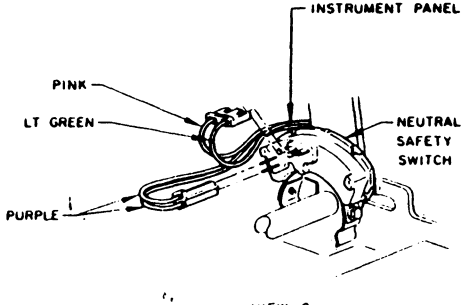

VIEW-C

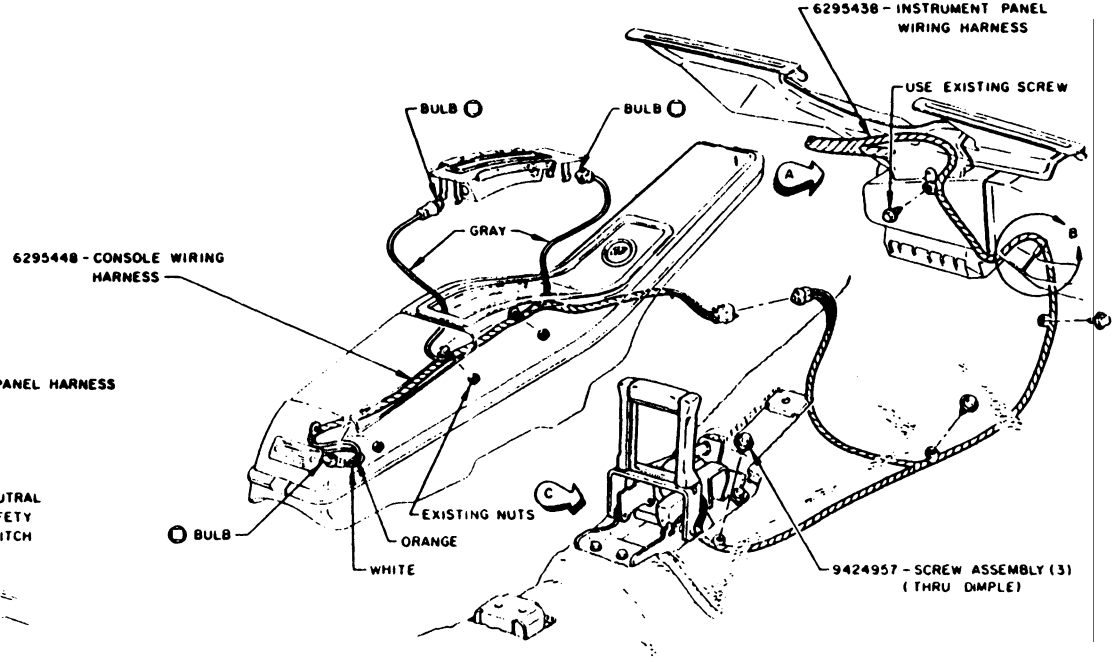

O FOR BULB SIZE INFORMATION
SEE LAMP & FUSE CHART

DO NOT SCALE — REPORT ERRORS
TOLERANCES UNLESS OTHERWISE SPECIFIED
X ALLOWED ON TWO PLACE DECIMALS
X .010 ALLOWED ON THREE PLACE DECIMALS
COMMERCIAL TOLERANCES APPLY TO STANDARD PARTS - ROLLED SECTIONS - SHEET METAL GAGES - DRILLED AND PUNCHED HOLES
BURR ALL DRILLED HOLES COUNTERSINK ALL TAPPED HOLES .010 X 82°

DWG DATE 2-28-67	SCALE	DR FRED MATTES
FIRST USED 1908-A		CK
REFERENCE		APPR
		APPR
		APPR

(FLOOR SHIFT - AUTO. TRANS)

NAME CONSOLE INSTALLATION

PART NO. 1383945 | PAGE NO. I-5.2

SHEET 2 OF 3 SHEETS

1383945

DAVE GRAHAM INC. - 2015
ALL RIGHTS RESERVED

1383945

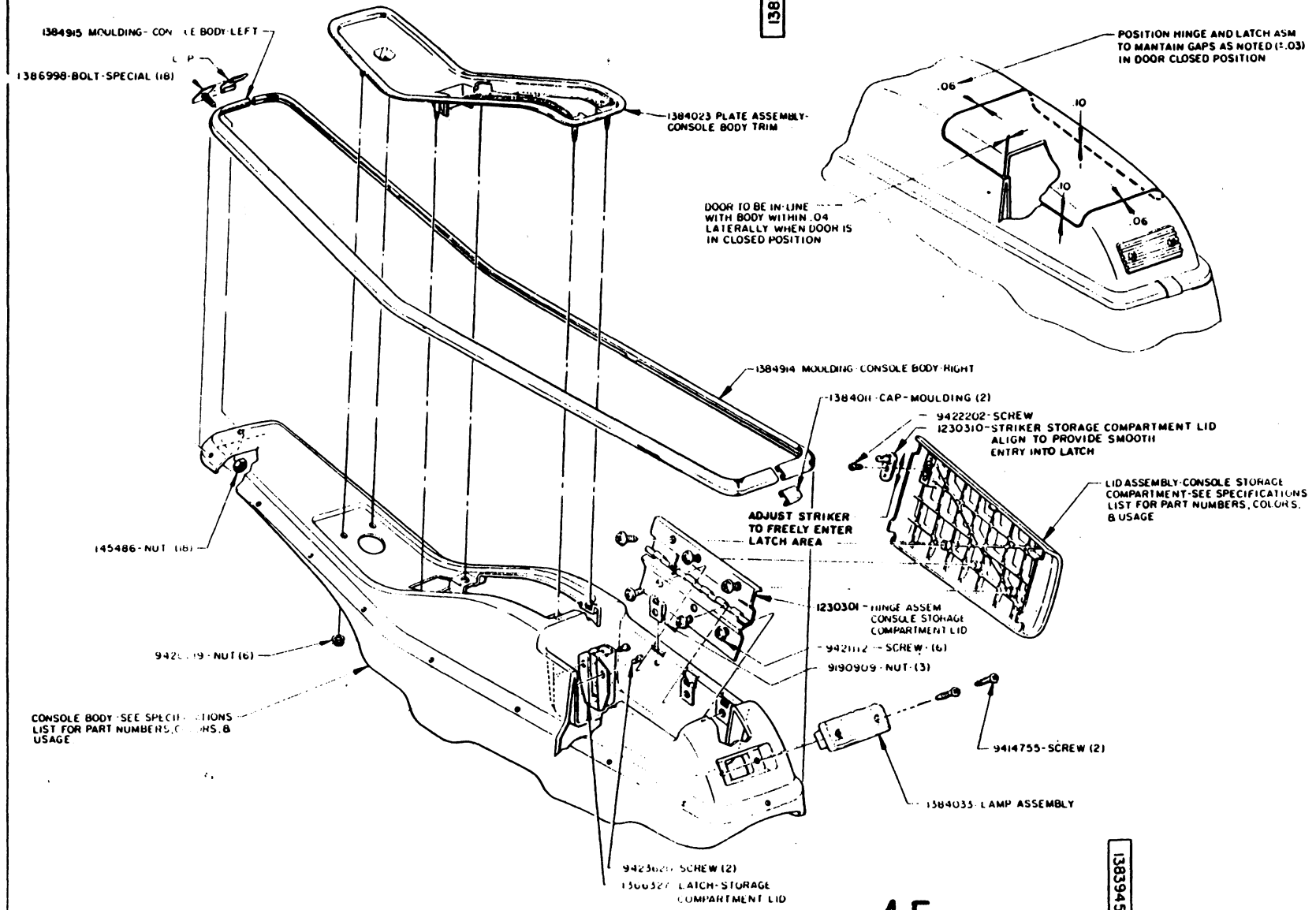

DATE	DTR	REVISION RECORD	APPR	BR	CK

DO NOT SCALE — REPORT ERRORS

TOLERANCES UNLESS OTHERWISE SPECIFIED
± ALLOWED ON TWO PLACE DECIMALS
± .010 ALLOWED ON THREE PLACE DECIMALS
COMMERCIAL TOLERANCES APPLY TO STAMPED PARTS - ROLLED SECTIONS - SHEET METAL GAGES - DRILLED AND PUNCHED HOLES
BURR ALL DRILLED HOLES COUNTERSINK ALL TAPPED HOLES 100 X 90°

DWG DATE 3-1-68	SCALE #	DR F DUNN	
FIRST USED 1968 A		CK	
REFERENCE		APPR	
		APPR	
		APPR	

(FLOOR SHIFT AUTO TRANS)

NAME CONSOLE INSTALLATION

PART NO 1383945 | PAGE NO

SHEET 3 OF 3 SHEETS | 1-53

1383945

45

DAVE GRAHAM INC. - 2015
ALL RIGHTS RESERVED

DAVE GRAHAM INC. - 2015
ALL RIGHTS RESERVED

1385064

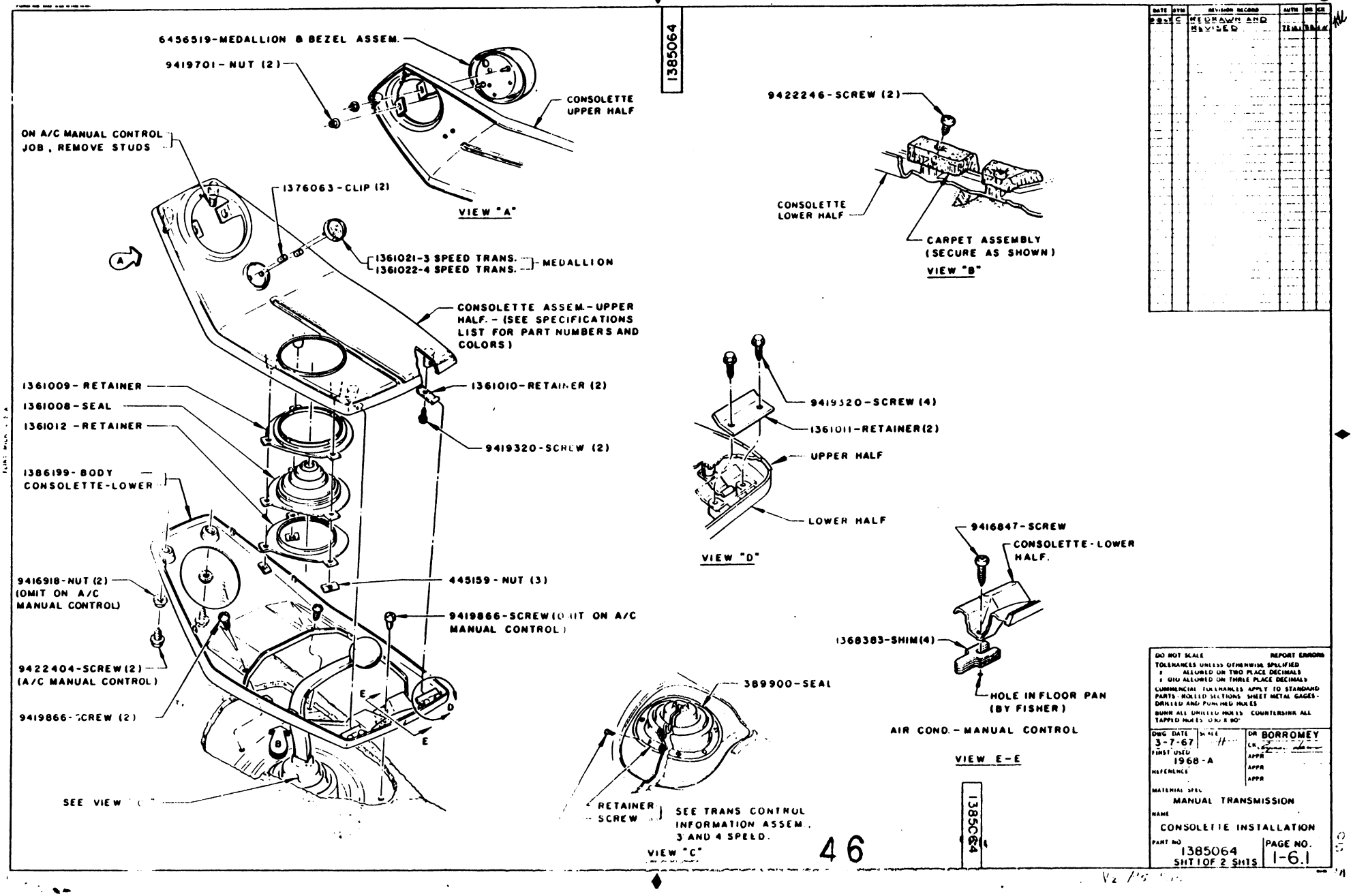

DATE	BY	REVISION RECORD	AUTH	DR	CK
3-7-67	C	RE-DRAWN AND REVISED			

DO NOT SCALE — REPORT ERRORS
TOLERANCES UNLESS OTHERWISE SPECIFIED
± ALLOWED ON TWO PLACE DECIMALS
± .010 ALLOWED ON THREE PLACE DECIMALS
COMMERCIAL TOLERANCES APPLY TO STANDARD PARTS. ROLLED SECTIONS, SHEET METAL GAGES. DRILLED AND PUNCHED HOLES.
BURR ALL DRILLED HOLES. COUNTERSINK ALL TAPPED HOLES .010 X 80°

DWG DATE	SCALE	DR
3-7-67	1/1	BORROMEY
FIRST USED		CK
1968-A		APPR
REFERENCE		APPR
		APPR

MATERIAL SPEC
MANUAL TRANSMISSION
NAME
CONSOLETTE INSTALLATION
PART NO 1385064
SHT 1 OF 2 SHTS
PAGE NO. 1-6.1

1385064

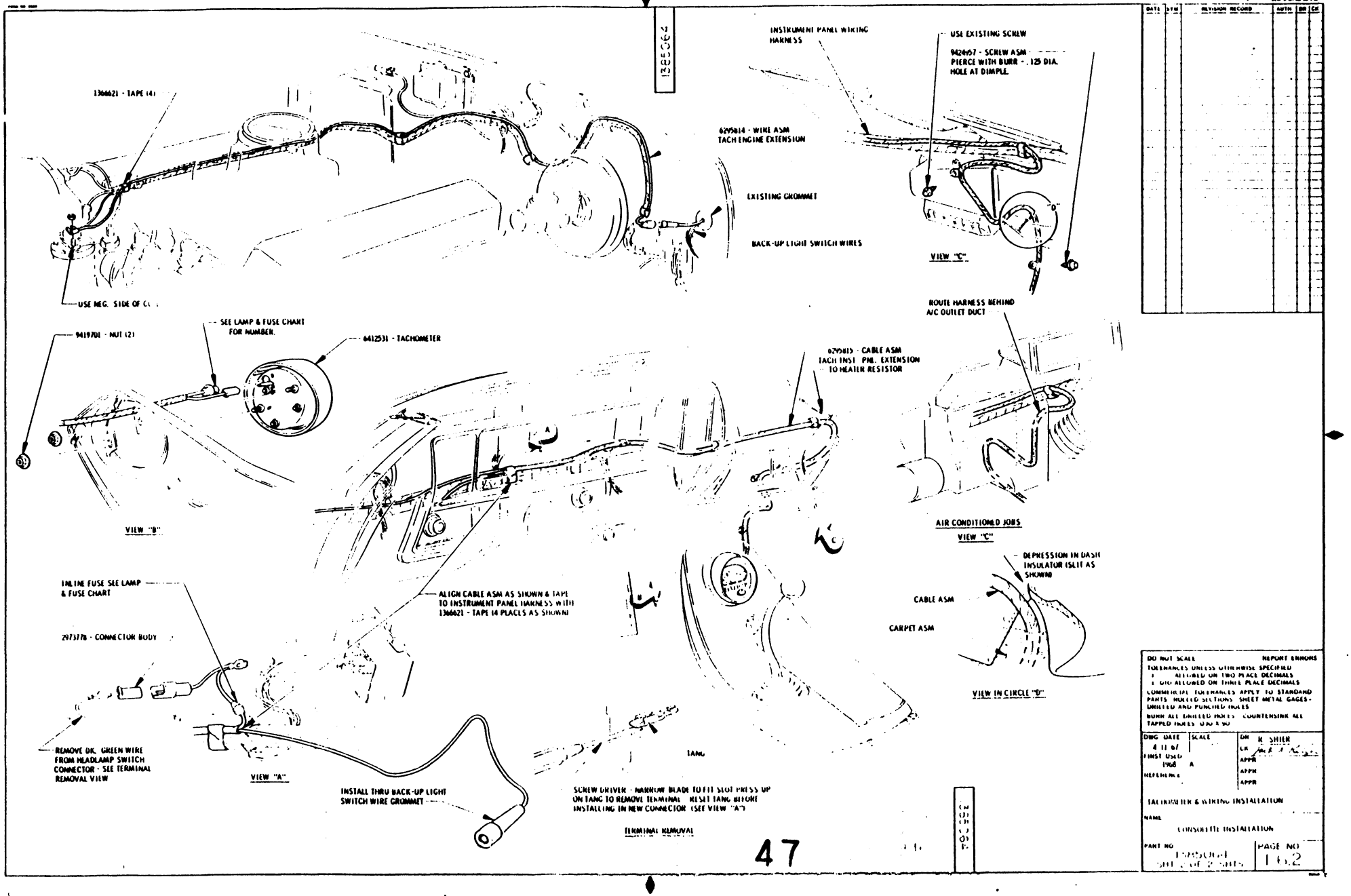

DATE	STR	REVISION RECORD	AUTH	DR	CK

DO NOT SCALE — REPORT ERRORS
TOLERANCES UNLESS OTHERWISE SPECIFIED
X ALLOWED ON TWO PLACE DECIMALS
X DIG ALLOWED ON THREE PLACE DECIMALS
COMMERCIAL TOLERANCES APPLY TO STANDARD PARTS ROLLED SECTIONS SHEET METAL GAGES - DRILLED AND PUNCHED HOLES
BURR ALL DRILLED HOLES COUNTERSINK ALL TAPPED HOLES 030 X 90

DWG DATE	SCALE	DR R. SHIER
4 11 67		CK
FIRST USED		APPR
1968 A		APPR
REFERENCE		APPR

TACHOMETER & WIRING INSTALLATION

NAME
CONSOLETTE INSTALLATION

PART NO 1366364 SHT 2 OF 2 SHTS | PAGE NO 16.2

DAVE GRAHAM INC. - 2015
ALL RIGHTS RESERVED

1383756

INSTALLATION INSTRUCTIONS

1. LOCATE CENTER COMPARTMENT TO REAR BRACKET & FASTEN WITH - SCREWS.
2. CENTER FRONT END OF COMPARTMENT BETWEEN THE SEATS & DRILL 192/195 DIAMETER (1) HOLE IN FLOOR PAN AT FORWARD END OF COMPARTMENT. USING COMPARTMENT TO LOCATE - FASTEN WITH ONE SCREW.

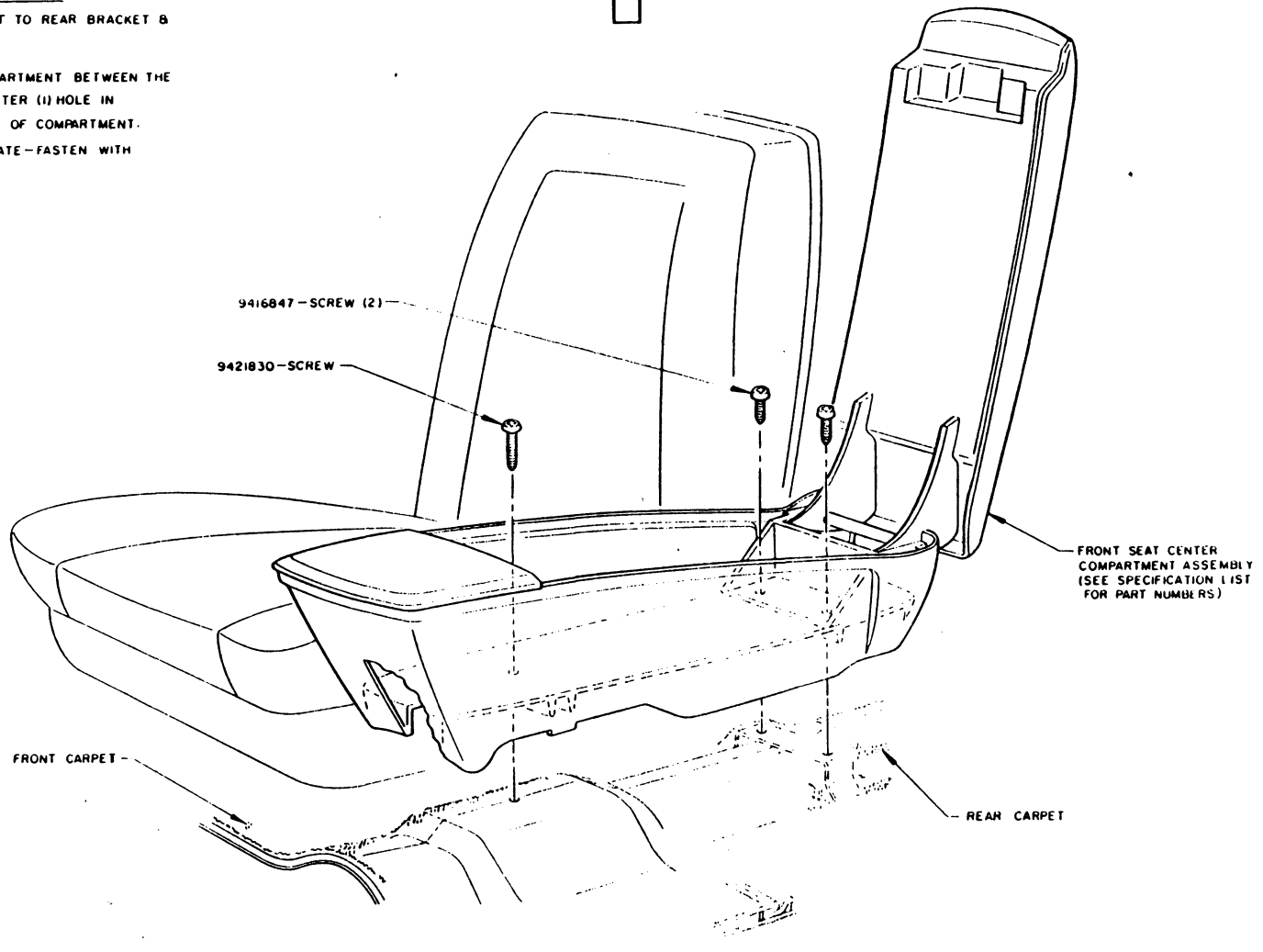

DATE	SYM	REVISIONS	AUTH	BR	CK
	A	REVISED			

DO NOT SCALE — REPORT ERRORS
TOLERANCES UNLESS OTHERWISE SPECIFIED
± ALLOWED ON TWO PLACE DECIMALS
± .010 ALLOWED ON THREE PLACE DECIMALS
COMMERCIAL TOLERANCES APPLY TO STANDARD PARTS - ROLLED SECTIONS SHEET METAL GAGES - DRILLED AND PUNCHED HOLES.
BURR ALL DRILLED HOLES COUNTERSINK ALL TAPPED HOLES .030 X 90°

DWG DATE 11-1-66	SCALE —	DR J SHEARLOCK
FIRST USED 1968 - A		CK
REFERENCE		APPR
		APPR
		APPR

NAME: COLUMN SHIFT
NAME: CONSOLE INSTALL - SPORT
PART NO 1383756 | PAGE NO. 1-7.1

1383756

VY P14525

DAVE GRAHAM INC. - 2015
ALL RIGHTS RESERVED

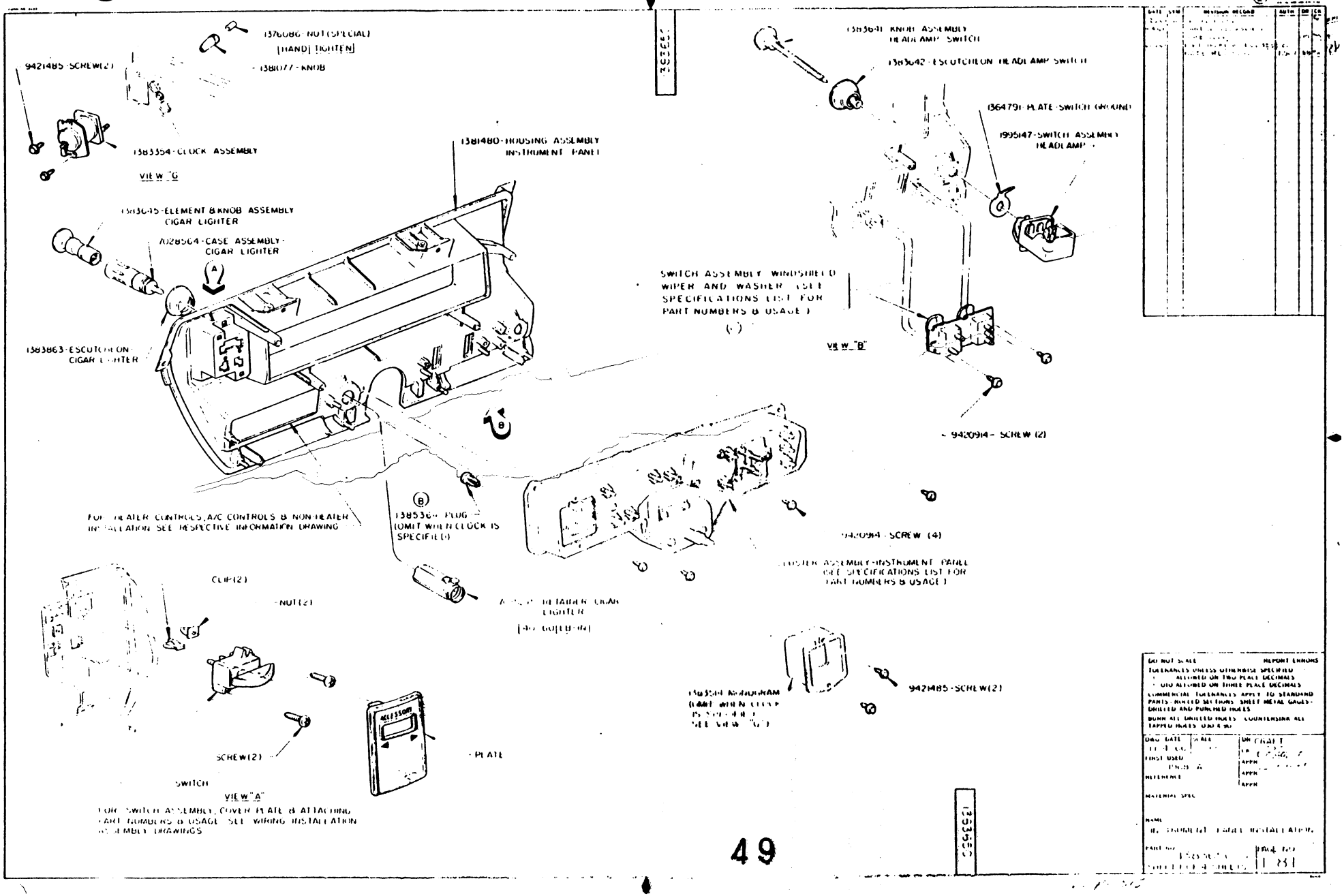

49

DAVE GRAHAM INC. - 2015
ALL RIGHTS RESERVED

DAVE GRAHAM INC. - 2015
ALL RIGHTS RESERVED

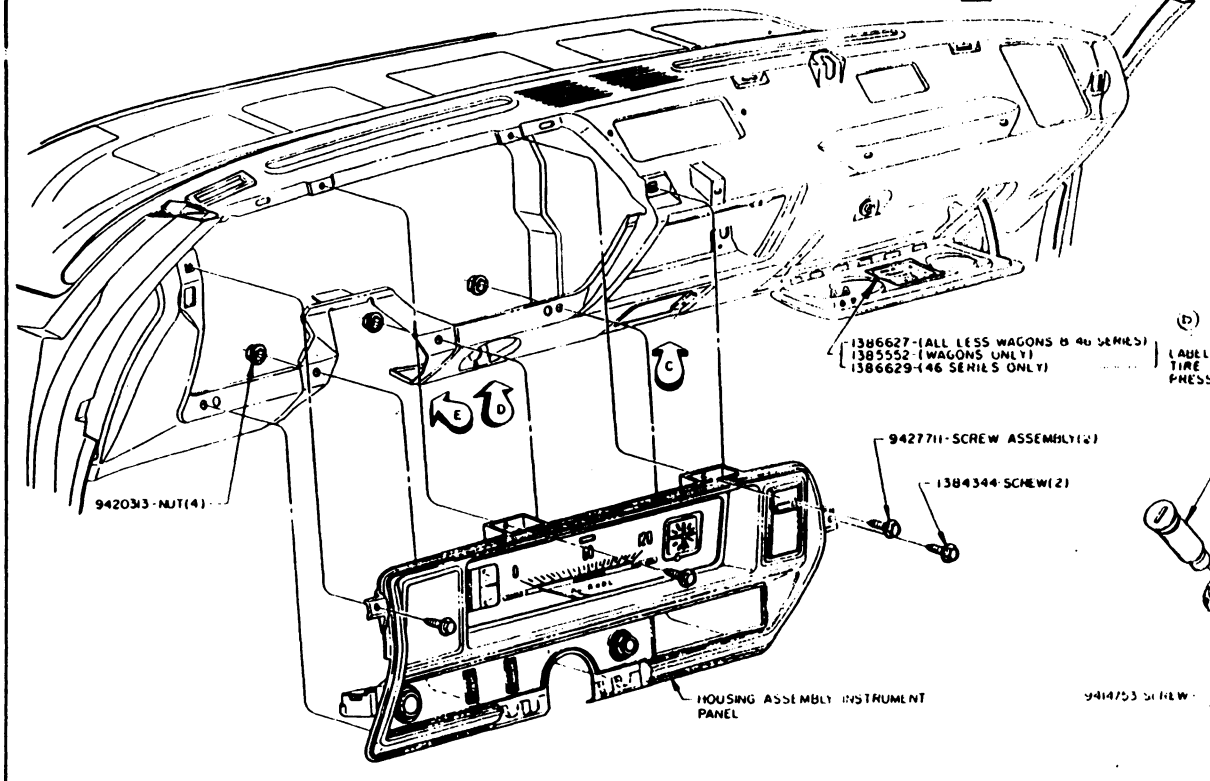

1386627-(ALL LESS WAGONS & 46 SERIES)
1385552-(WAGONS ONLY)
1386629-(46 SERIES ONLY) — LABEL-TIRE PRESSURE

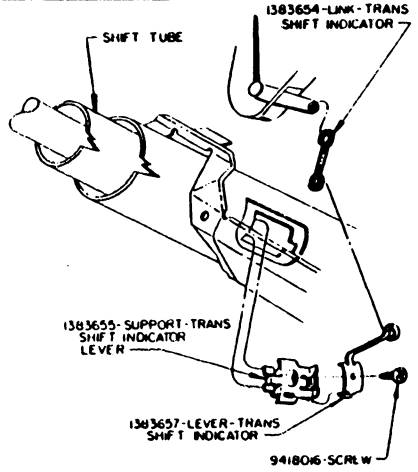

VIEW "E"
AUTOMATIC TRANSMISSION COLUMN SHIFT ONLY

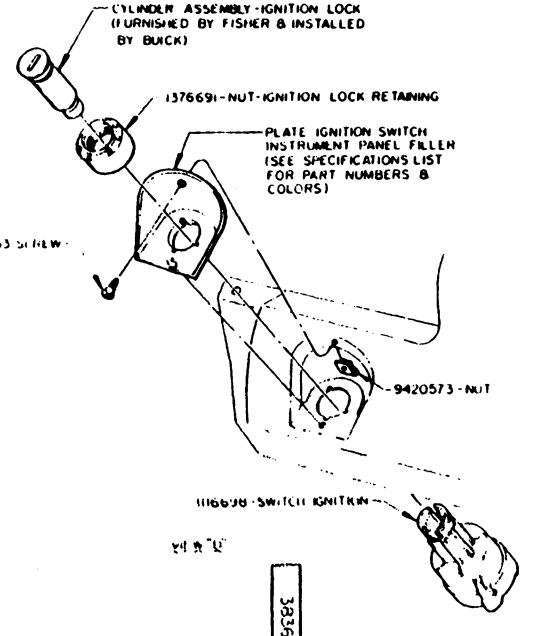

VIEW "D"

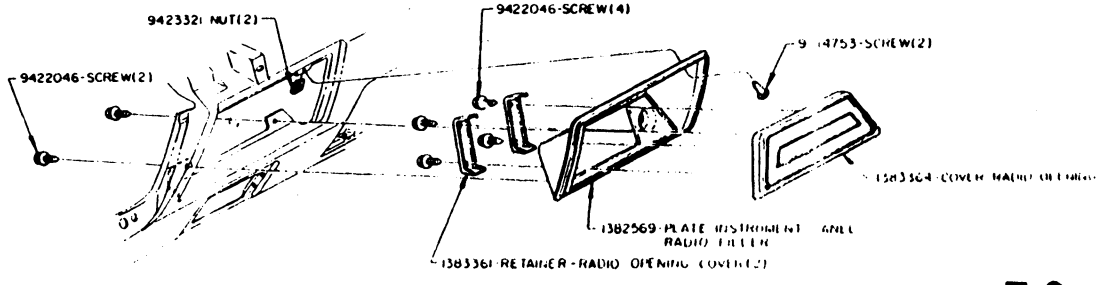

VIEW "C"

BUICK MOTOR DIVISION
GENERAL MOTORS CORPORATION
FLINT, MICH., U.S.A.

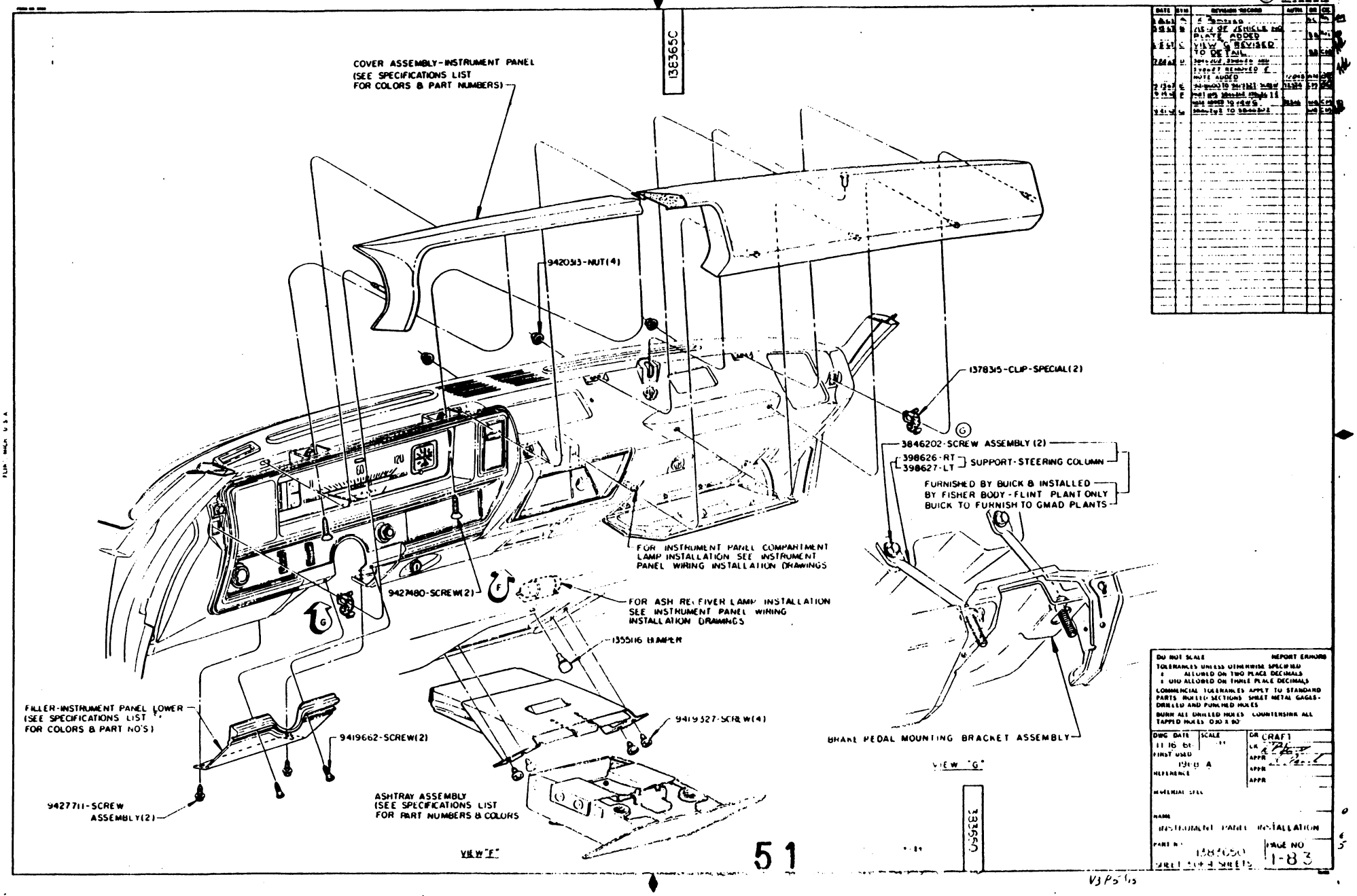

DAVE GRAHAM INC. - 2015
ALL RIGHTS RESERVED

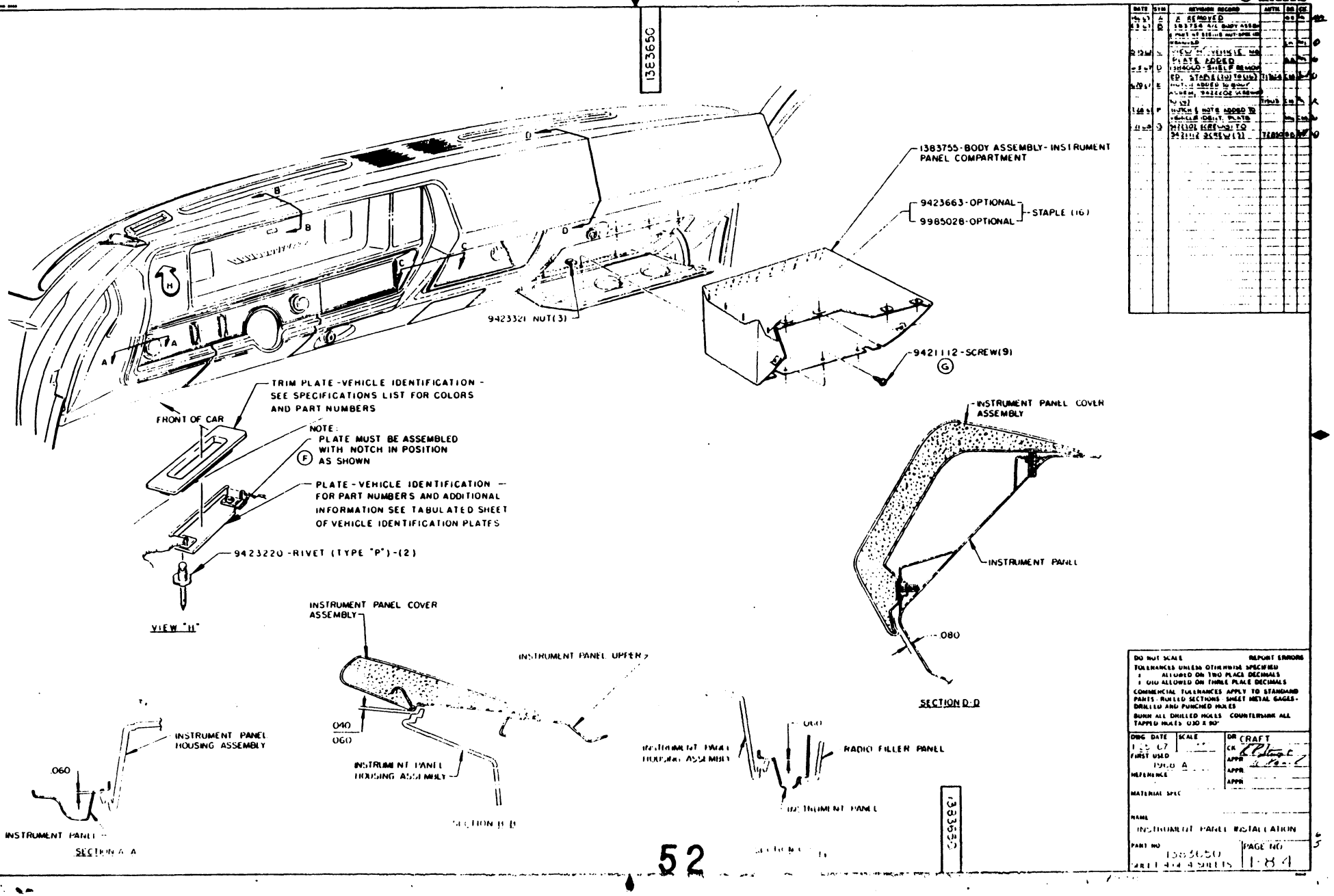

DATE	SYM	REVISION RECORD	AUTH	DR	CK
	A	REMOVED			
	B	1383750 A/C BODY ASSEM			
	C	PLATE, EDGED			
	D	1384000-SHELF REINFOR			
	E	ED. STAPLE (10) TO (16)			
	F	NUTS & NOTE ADDED TO VEHICLE IDENT. PLATE			
	G	SYMBOL REFERRED TO SPECIFIC SCREW (1)			

DO NOT SCALE — REPORT ERRORS
TOLERANCES UNLESS OTHERWISE SPECIFIED
X ALLOWED ON TWO PLACE DECIMALS
X DIA ALLOWED ON THREE PLACE DECIMALS
COMMERCIAL TOLERANCES APPLY TO STANDARD PARTS - ROLLED SECTIONS SHEET METAL GAGES - DRILLED AND PUNCHED HOLES
BURR ALL DRILLED HOLES COUNTERSINK ALL TAPPED HOLES .030 X 90°

DWG DATE 1-25-67	SCALE
FIRST USED 1968 A	DR CRAFT
REFERENCE	CK K Craft
MATERIAL SPEC	APPR
NAME INSTRUMENT PANEL INSTALLATION	
PART NO 1383650	PAGE NO 1-84
SHEET 4 OF 4 SHEETS	

GENERAL MOTORS CORPORATION FLINT, MICH. U.S.A.

DAVE GRAHAM INC. - 2015
ALL RIGHTS RESERVED

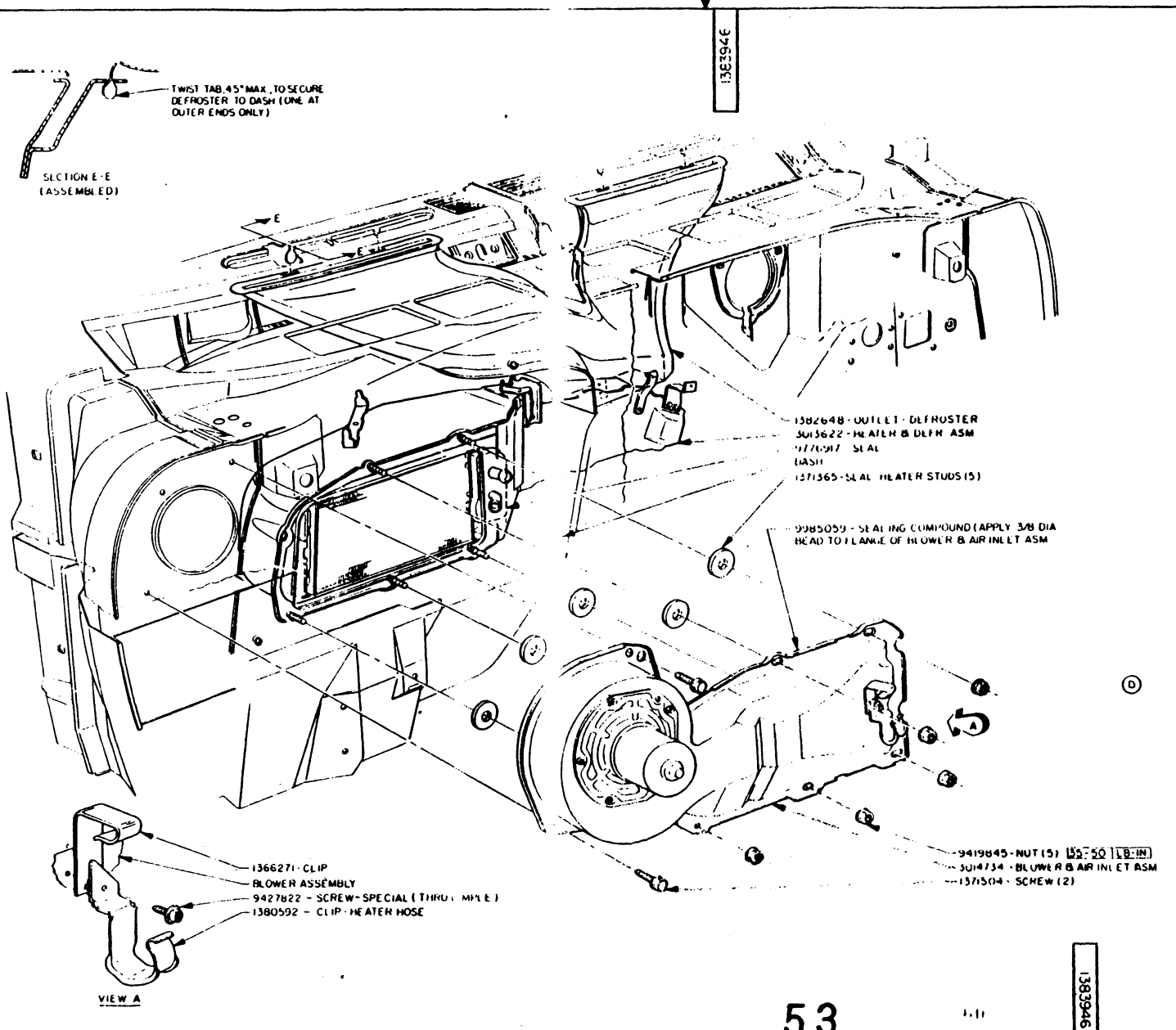

1383946

DATE	SYM	REVISION RECORD	AUTH	DR	CK
[illegible]	A	REMOVED			
[illegible]	B	VIEW B ADDED	[illegible]		
[illegible]	C	9423521 TO 9423555	[illegible]		
[illegible]	D	VIEW B REMOVED	[illegible]		

ALL UNIT SEALS TO DASH DUCTS ETC. MUST BE CHECKED FOR AIR LEAKS, HIGH BLOWER AIR LEAKS MUST BE SEALED.

SEE DASH INSTALLATION DRAWING FOR ADDITIONAL DASH SEALING INFORMATION

DO NOT SCALE — REPORT ERRORS

TOLERANCES UNLESS OTHERWISE SPECIFIED
± ALLOWED ON TWO PLACE DECIMALS
± .010 ALLOWED ON THREE PLACE DECIMALS

COMMERCIAL TOLERANCES APPLY TO STANDARD PARTS - ROLLED SECTIONS - SHEET METAL GAGES - DRILLED AND PUNCHED HOLES

BURN ALL DRILLED HOLES COUNTERSINK ALL TAPPED HOLES .030 X 90°

DWG DATE 11-18-66	SCALE —	DR BECK - MEADE
FIRST USED 1968 - A		CK
REFERENCE		APPR
		APPR
		APPR

MATERIAL SPEC.

NAME
HEATER & DEFROSTER INSTALLATION

PART NO. 1383946 SHEET 1 OF 4 SHEETS — PAGE NO 191

1383946

53

DAVE GRAHAM INC. - 2015
ALL RIGHTS RESERVED

CONTROL WIRE ASSEMBLY AND ADJUSTMENT.

1 SUB-ASSEMBLE CONTROL WIRES TO INSTRUMENT PANEL CONTROLS.

2 DEFROSTER.
ASSEMBLE DEFROSTER WIRE TO DEFROSTER VALVE.

3 OUTSIDE AIR.
A SECURE OUTSIDE AIR WIRE TO OUTSIDE AIR VALVE.
B ADJUST OUTSIDE AIR CABLE SO THAT OUTSIDE AIR DOOR IS FULLY CLOSED WHEN INDICATOR IS 1/16 TO 1/8 IN. FROM "OFF" POSITION. SEE VIEW "B".
SELECTOR CONTROL WILL LOCK IN "HTR" POSITION IF INDICATOR IS LESS THAN 1/16 IN. FROM "OFF" POSITION AND WILL NOT FULLY OPEN OUTSIDE AIR DOOR IF INDICATOR IS MORE THAN 1/8 IN. FROM "OFF" POSITION.

4 TEMPERATURE.
A. SECURE TEMPERATURE WIRE TO TEMPERATURE CONTROL VALVE.
B ADJUST TEMPERATURE CABLE SO THAT TEMPERATURE DOOR IS FULLY CLOSED WHEN TEMPERATURE INDICATOR IS 1/16 TO 1/8 IN. FROM "OFF" POSITION.

CONTROLS MUST BE 100% INSPECTED FOR CORRECT OPERATION AND FREE MOVEMENT.

DATE	SYM	REVISION RECORD	AUTH.	DR.	CK.
7/26/67	A	X REMOVED.			
7/10/67	B	1381352 OPT REMOVED	7200		
9-20-67	C	381700 WASHER REPLACED BY 401827 NUT (2 PLACES) QUANTITY CHANGED (381700)	7175		
3-8-67	D	1384169 TO 1385082, 1383777 TO 1385090 & 1384640 TO 1385079			

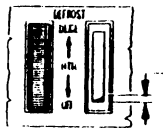

1/16" TO 1/8" INDICATED

VIEW B

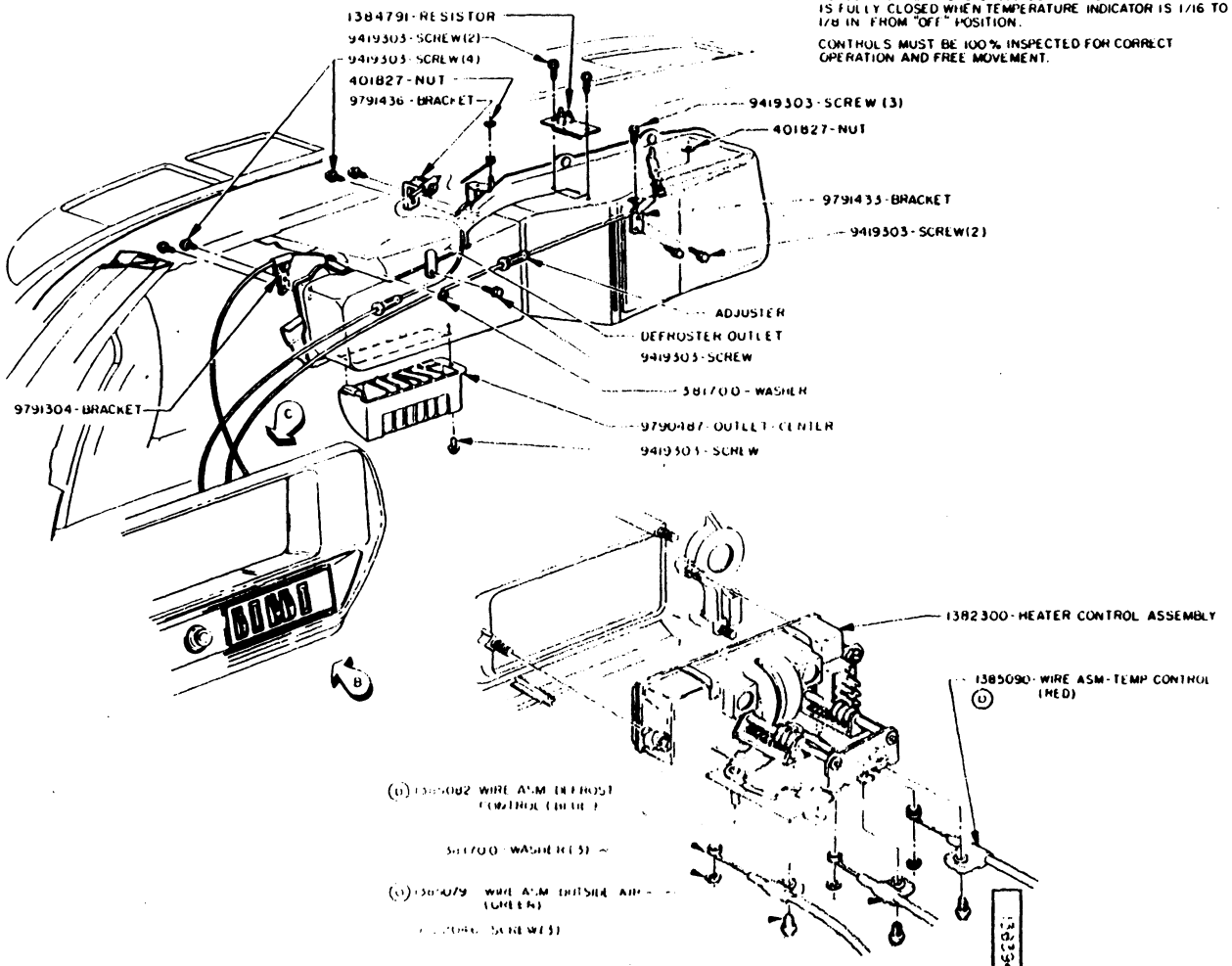

DO NOT SCALE — REPORT ERRORS

TOLERANCES UNLESS OTHERWISE SPECIFIED
± ALLOWED ON TWO PLACE DECIMALS
± .010 ALLOWED ON THREE PLACE DECIMALS
COMMERCIAL TOLERANCES APPLY TO STANDARD PARTS - ROLLED SECTIONS - SHEET METAL GAGES - DRILLED AND PUNCHED HOLES
BURN ALL DRILLED HOLES. COUNTERSINK ALL TAPPED HOLES .030 X 90°

DWG DATE	SCALE	DR BECK-MEADE
3-8-67		CK
FIRST USED	1968 A	APPR
REFERENCE		APPR
		APPR
MATERIAL SPEC		

NAME
HEATER & DEFROSTER INSTALLATION

PART NO 1383946 SHEET 2 OF 4 SHEETS — PAGE NO 1-92

GENERAL MOTORS CORPORATION
FLINT, MICH., U.S.A.

DAVE GRAHAM INC. - 2015
ALL RIGHTS RESERVED

1383946

HEATER HOSE PRECAUTIONS

1. HOSES MUST BE PUSHED ON EACH CONNECTION AS FAR AS POSSIBLE.
2. NOT PERMISSIBLE TO USE ANY WETTING AGENTS TO ASSIST HOSE ASSEMBLY.
3. HOSE CLAMP MUST BE INSTALLED STRAIGHT, AWAY FROM END OF HOSE AND SLIGHTLY BEHIND BEAD ON EACH CONNECTION.
4. TIGHTEN ALL SCREW TYPE HOSE CLAMPS TO 16-22 LB-IN
5. DO NOT OVER SPREAD SPRING TYPE HOSE CLAMPS DURING ASSEMBLY. USE PROPER TOOL WITH SPACERS.

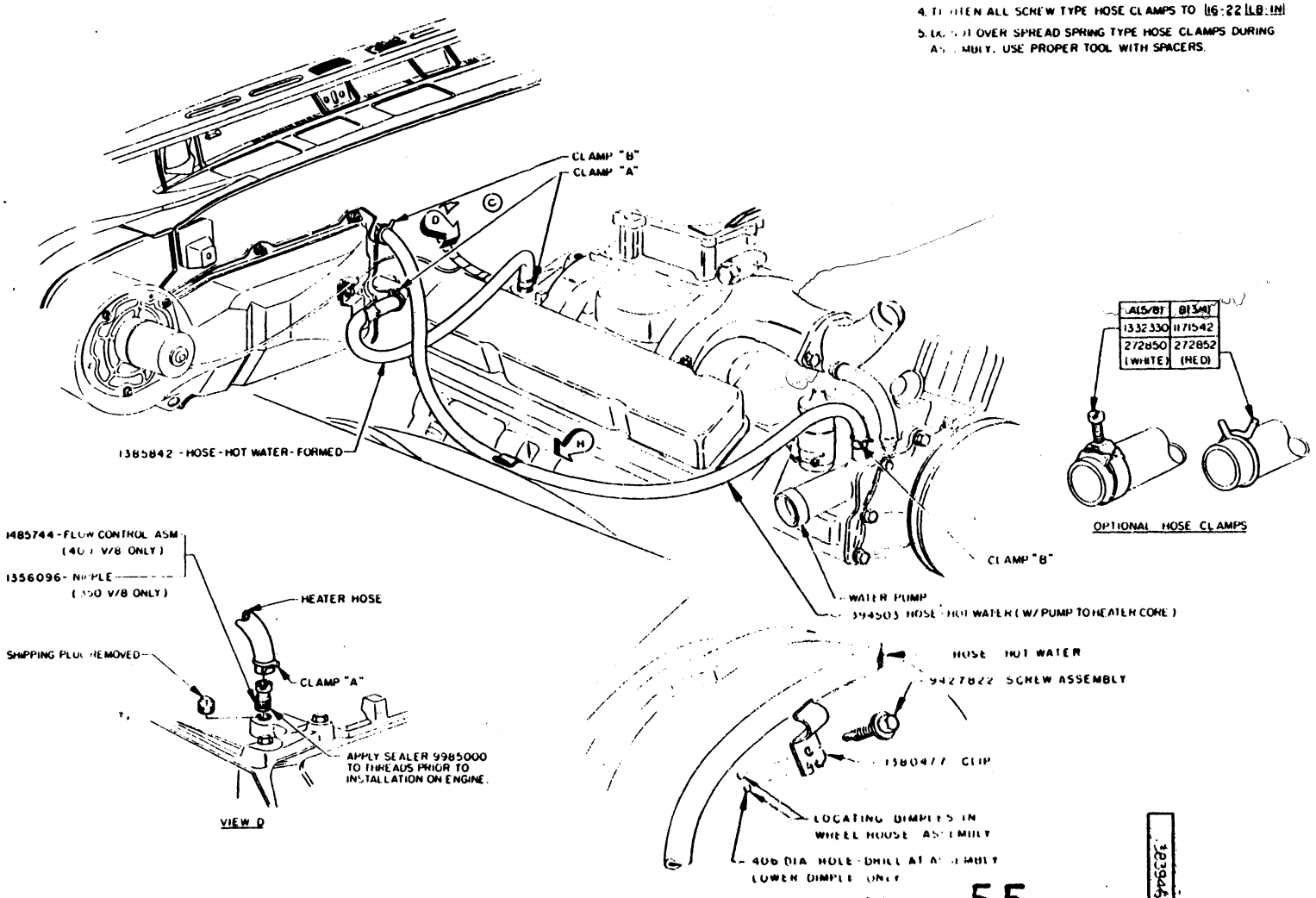

A(5/8)	B(3/4)
1332330	1171542
272850 (WHITE)	272852 (RED)

OPTIONAL HOSE CLAMPS

DATE	SYM	REVISION RECORD	AUTH.	DR	CK
7/27/67	A	"A" REMOVED.			
9/67	B	1380655 TO 1385842 (HOSE FORMED) 1382[illegible] TO 394503 (HOSE-HOT WATER) 1384231 TO 1380477 (CLIP) VIEW "B" REVISED	[illegible]	[illegible]	[illegible]
10/67	C	PICTURE OF WIRING AT ENGINE REVISED	[illegible]	[illegible]	[illegible]

DO NOT SCALE — REPORT ERRORS
TOLERANCES UNLESS OTHERWISE SPECIFIED
± ALLOWED ON TWO PLACE DECIMALS
± .010 ALLOWED ON THREE PLACE DECIMALS
COMMERCIAL TOLERANCES APPLY TO STANDARD PARTS - ROLLED SECTIONS - SHEET METAL GAGES - DRILLED AND PUNCHED HOLES
BURN ALL DRILLED HOLES - COUNTERSINK ALL TAPPED HOLES .030 X 60°

DWG DATE	SCALE	DR W MEADE
11-23-66		CK
FIRST USED 1968-A		APPR
REFERENCE		APPR
		APPR

350 400 V/8

NAME: HEATER & DEFROSTER INSTALLATION

PART NO. 1383946 SHEET 3 OF 4 SHEETS

PAGE NO. 1-93

1383946

DAVE GRAHAM INC. - 2015
ALL RIGHTS RESERVED

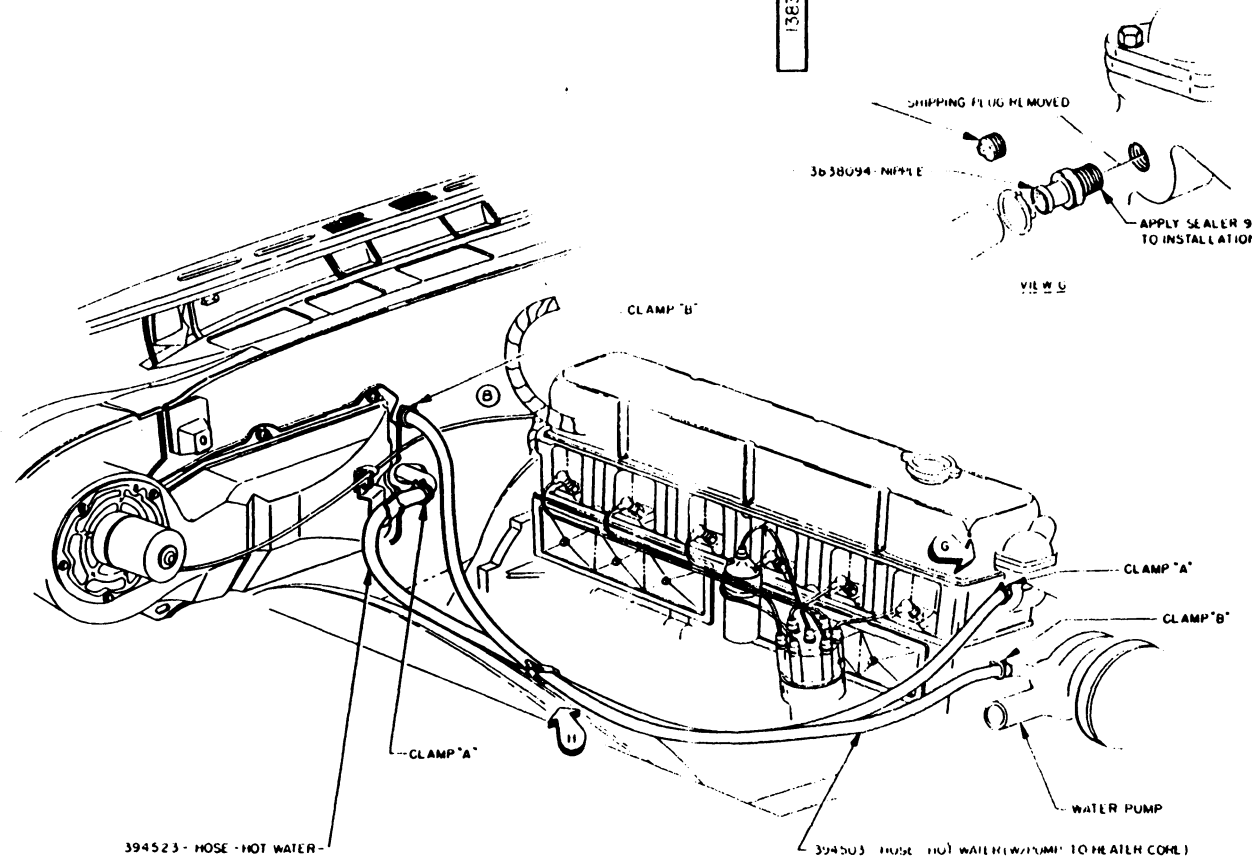

SEE SHEET * 3 FOR HEATER HOSE PRECAUTIONS AND HOSE CLAMPS.

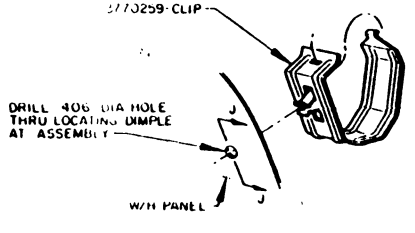

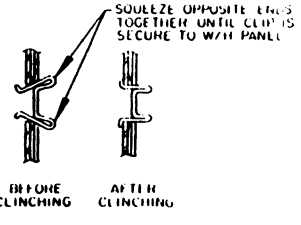

DATE	BY	REVISION RECORD	APPR	DR	CK
11 5 66	A	A REMOVED		W MEADE	
6 10 67	B	PICTURE OF PUMP AT ENGINE REVISED			

DO NOT SCALE — REPORT ERRORS
TOLERANCES UNLESS OTHERWISE SPECIFIED
± ALLOWED ON TWO PLACE DECIMALS
± .010 ALLOWED ON THREE PLACE DECIMALS
COMMERCIAL TOLERANCES APPLY TO STANDARD PARTS - ROLLED SECTIONS - SHEET METAL GAGES - DRILLED AND PUNCHED HOLES.
BURR ALL DRILLED HOLES COUNTERSINK ALL TAPPED HOLES .030 X 80°.

DWG DATE	SCALE	DR W MEADE
11 5 66		CK
FIRST USED	PROD A	APPR
REFERENCE		APPR
		APPR

(PROD A SHEET 3)

NAME: HEATER & DEFROSTER INSTL

PART NO. 1383946 | SHEET 4 OF 4 SHEETS | PAGE NO 1-9.4

1383946

GENERAL MOTORS CORPORATION
FLINT, MICH., U.S.A.

DAVE GRAHAM INC. - 2015
ALL RIGHTS RESERVED

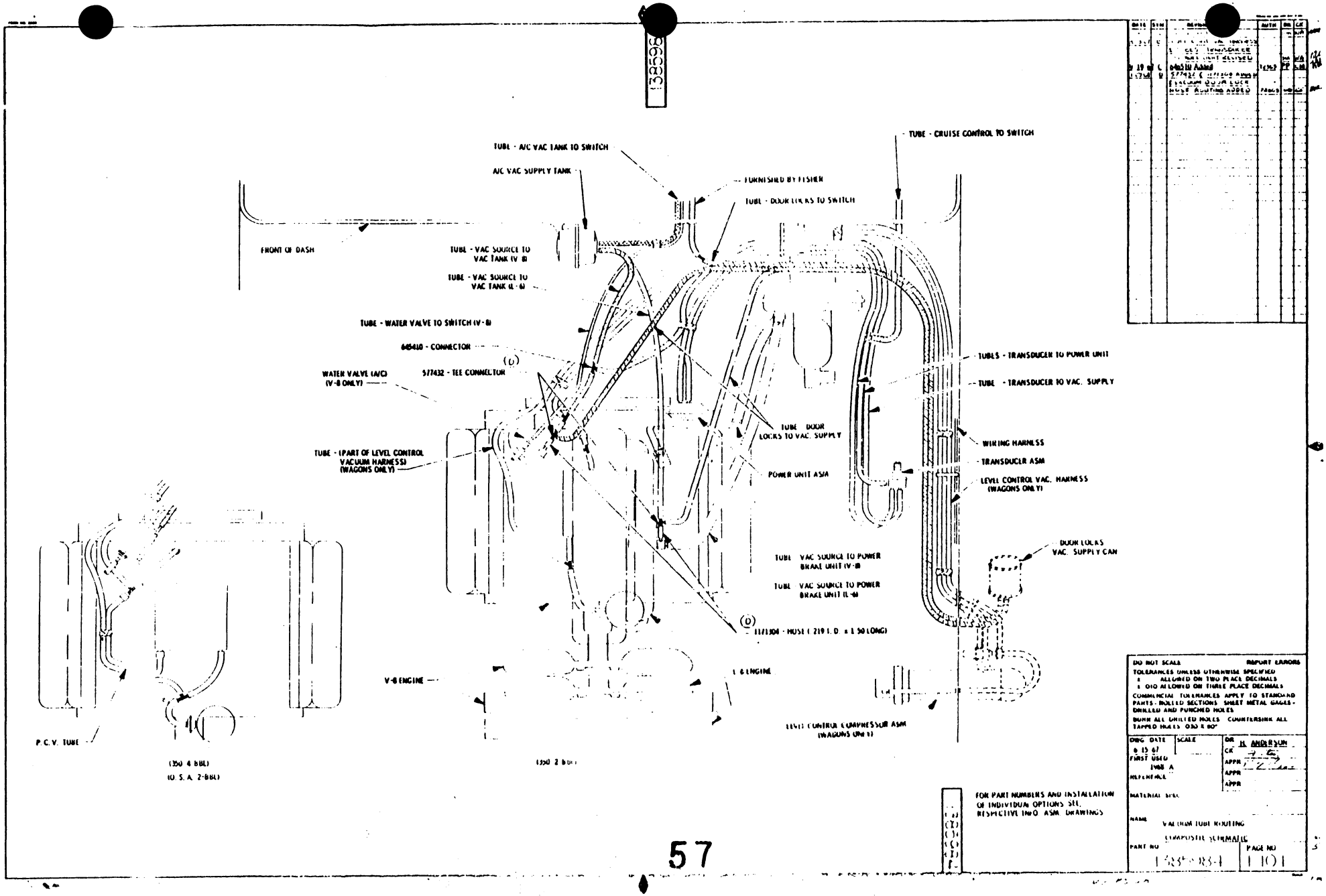

DAVE GRAHAM INC. - 2015
ALL RIGHTS RESERVED

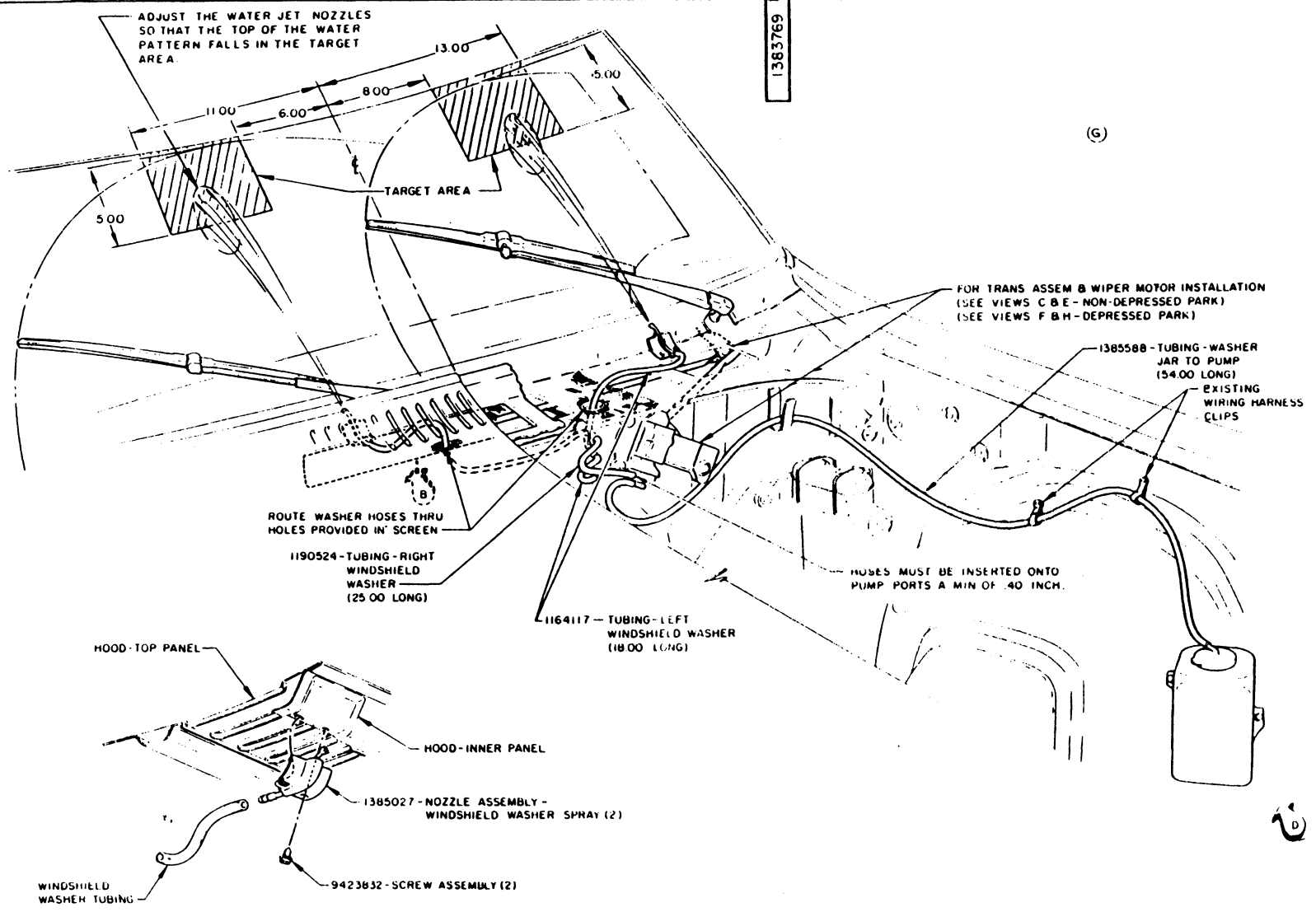

DAVE GRAHAM INC. - 2015
ALL RIGHTS RESERVED

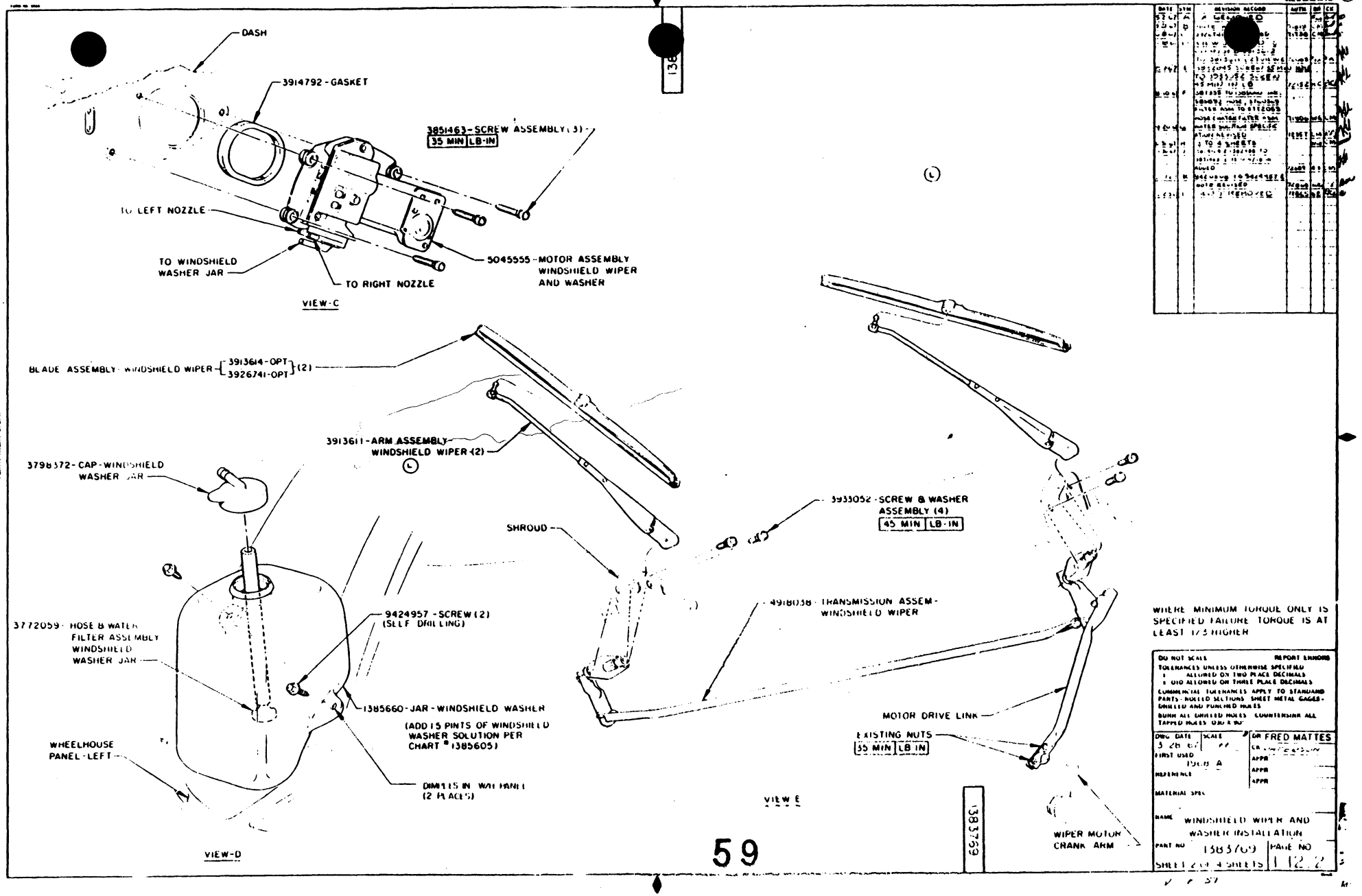

DAVE GRAHAM INC. - 2015
ALL RIGHTS RESERVED

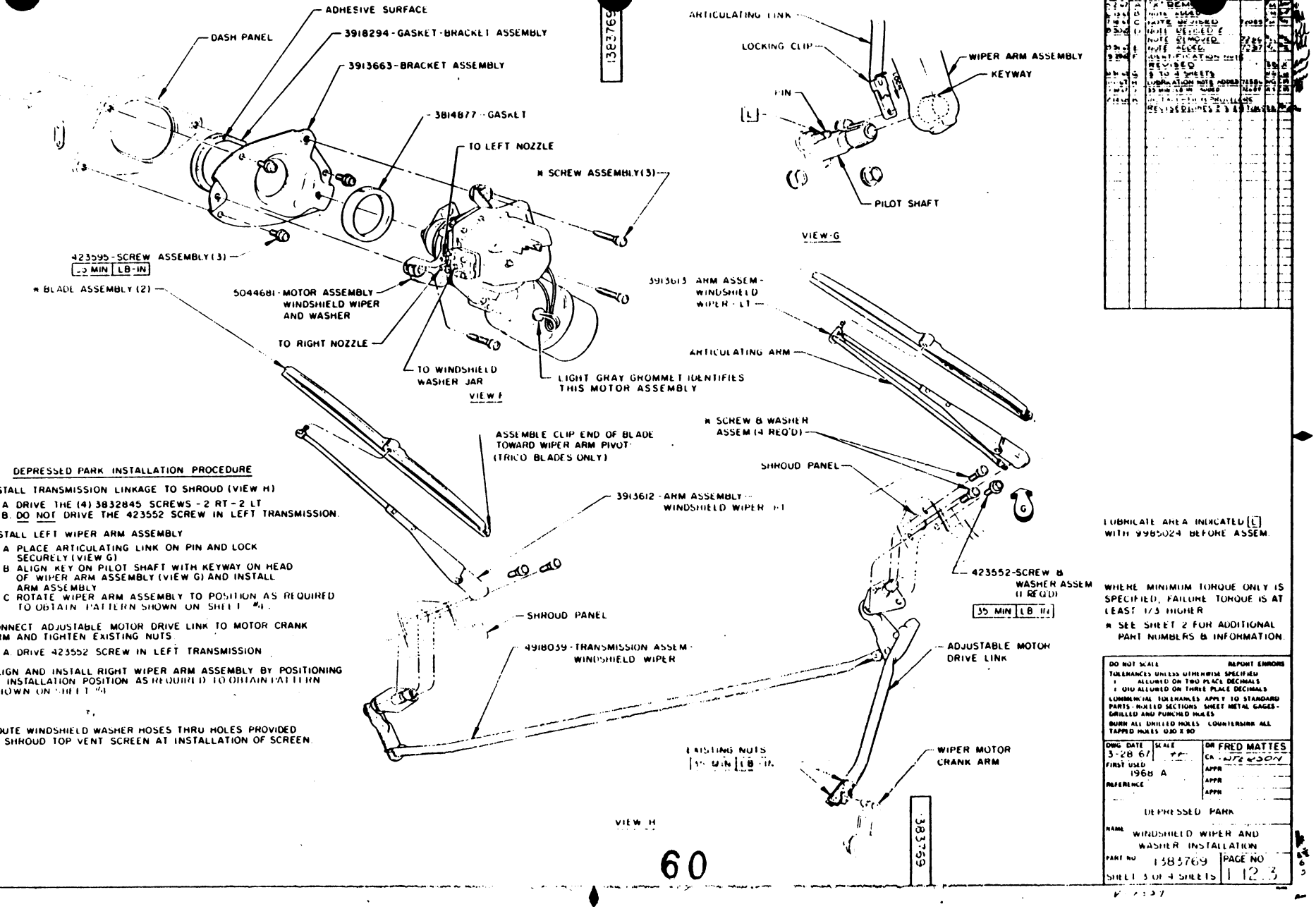

DEPRESSED PARK INSTALLATION PROCEDURE

1. INSTALL TRANSMISSION LINKAGE TO SHROUD (VIEW H)
   - A. DRIVE THE (4) 3832845 SCREWS - 2 RT - 2 LT
   - B. DO NOT DRIVE THE 423552 SCREW IN LEFT TRANSMISSION.
2. INSTALL LEFT WIPER ARM ASSEMBLY
   - A. PLACE ARTICULATING LINK ON PIN AND LOCK SECURELY (VIEW G)
   - B. ALIGN KEY ON PILOT SHAFT WITH KEYWAY ON HEAD OF WIPER ARM ASSEMBLY (VIEW G) AND INSTALL ARM ASSEMBLY
   - C. ROTATE WIPER ARM ASSEMBLY TO POSITION AS REQUIRED TO OBTAIN PATTERN SHOWN ON SHEET #1.
3. CONNECT ADJUSTABLE MOTOR DRIVE LINK TO MOTOR CRANK ARM AND TIGHTEN EXISTING NUTS
   - A. DRIVE 423552 SCREW IN LEFT TRANSMISSION
4. ALIGN AND INSTALL RIGHT WIPER ARM ASSEMBLY BY POSITIONING AT INSTALLATION POSITION AS REQUIRED TO OBTAIN PATTERN SHOWN ON SHEET #1
5. ROUTE WINDSHIELD WASHER HOSES THRU HOLES PROVIDED IN SHROUD TOP VENT SCREEN AT INSTALLATION OF SCREEN.

LUBRICATE AREA INDICATED [L] WITH 9985024 BEFORE ASSEM.

WHERE MINIMUM TORQUE ONLY IS SPECIFIED, FAILURE TORQUE IS AT LEAST 1/3 HIGHER

* SEE SHEET 2 FOR ADDITIONAL PART NUMBERS & INFORMATION.

DO NOT SCALE — REPORT ERRORS
TOLERANCES UNLESS OTHERWISE SPECIFIED
.X ALLOWED ON TWO PLACE DECIMALS
.XXX ALLOWED ON THREE PLACE DECIMALS
COMMERCIAL TOLERANCES APPLY TO STANDARD PARTS - MILLED SECTIONS SHEET METAL GAGES - DRILLED AND PUNCHED HOLES
BURR ALL DRILLED HOLES COUNTERSINK ALL TAPPED HOLES .030 X 90

DWG DATE	3-28-67
SCALE	FULL
FIRST USED	1968 A
REFERENCE	
DR	FRED MATTES
CK	WILKINSON
APPR	
APPR	
APPR	

DEPRESSED PARK

NAME: WINDSHIELD WIPER AND WASHER INSTALLATION

PART NO 1383769 | PAGE NO 12.3

SHEET 3 OF 4 SHEETS

1383769

DAVE GRAHAM INC. - 2015
ALL RIGHTS RESERVED

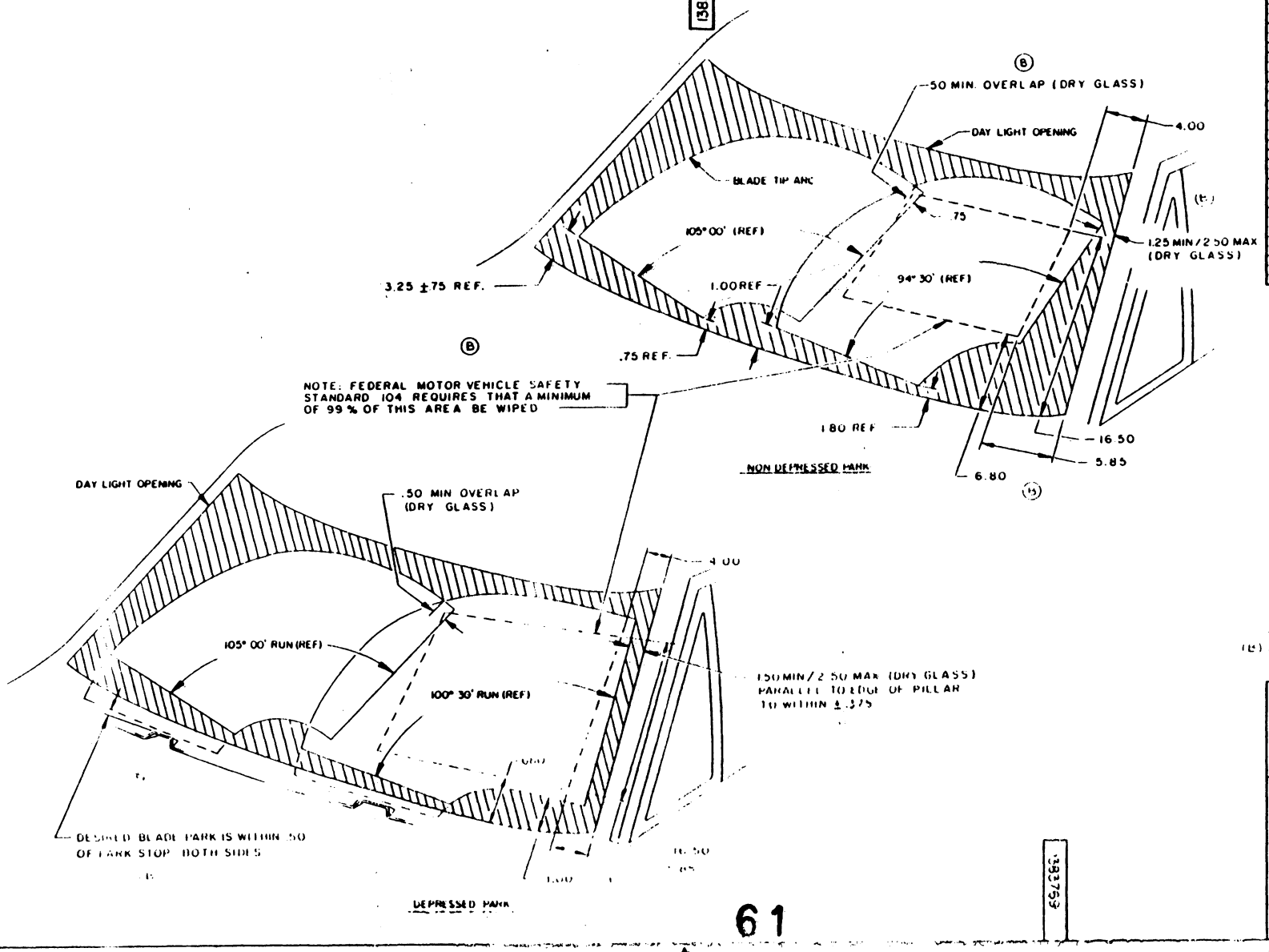

DATE	SYM	REVISION	AUTH.	DR	CK
	A	SHEET 4 ADDED			
	B	FEDERAL SAFETY REQ. ADDED WIPER ACTION & PARK LOCATIONS REDIMENSIONED COMPLETE TOLERANCE ADDED NOTES REVISED			

WINDSHIELD GLASS MUST BE WET WHEN CHECKING THE BLADE ASSEMBLY TO THE SPECIFIED DAY LIGHT OPENING (B) DIMENSION EXCEPT AS SHOWN

DO NOT SCALE — REPORT ERRORS
TOLERANCES UNLESS OTHERWISE SPECIFIED
± ALLOWED ON TWO PLACE DECIMALS
± .010 ALLOWED ON THREE PLACE DECIMALS
COMMERCIAL TOLERANCES APPLY TO STANDARD PARTS - ROLLED SECTIONS SHEET METAL GAGES - DRILLED AND PUNCHED HOLES
BURN ALL DRILLED HOLES COUNTERSINK ALL TAPPED HOLES .030 X 90°

DWG DATE	SCALE	DR W GRADY
11-1-67		CK
FIRST USED 1968 A		APPR
REFERENCE		APPR
		APPR

WINDSHIELD WIPE PATTERNS

NAME WINDSHIELD WIPER AND WASHER INSTALLATION

PART NO 1383769 SHEET 4 OF 4 SHEETS — PAGE NO 1-12.4

DAVE GRAHAM INC. - 2015
ALL RIGHTS RESERVED

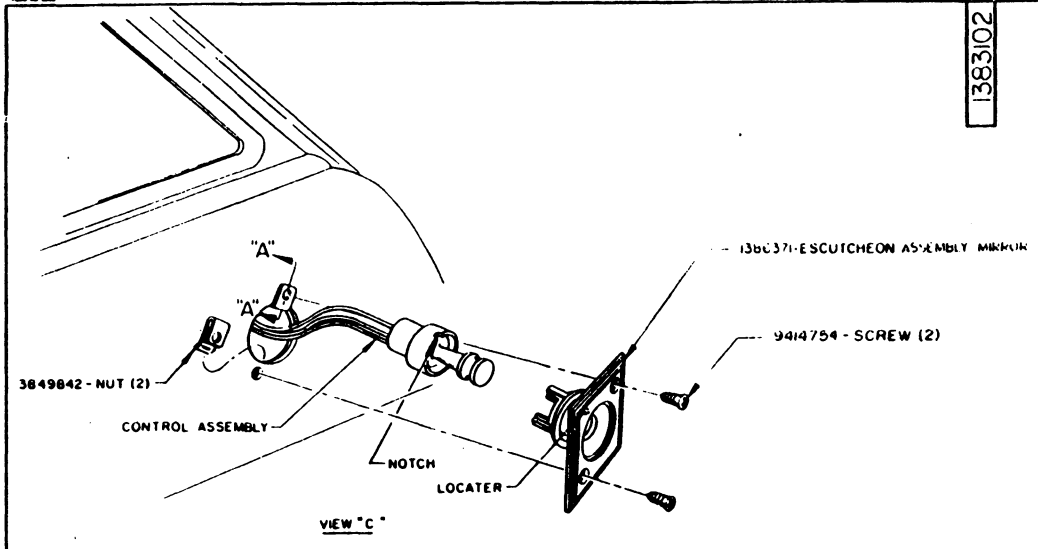

VIEW "C"

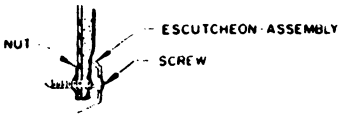

SECTION "A-A"

DATE	DTR	REVISION RECORD	AUTH	DR	CK
	A	E REMOVED			
	B	[illegible]			
		[illegible]			
		[illegible]			

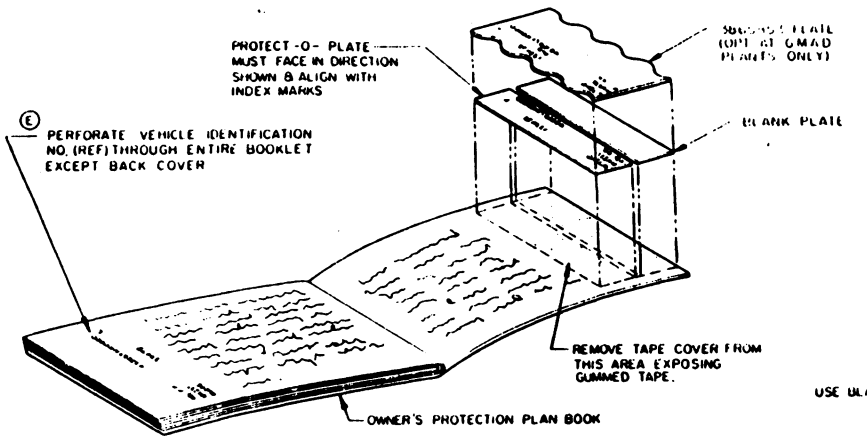

AFTER REMOVAL OF TAPE COVER ON INSIDE FACE OF REAR COVER OF BOOKLET, INSTALL PROTECT-O-PLATE WITH RAISED TYPE FACING UP.

(E) SERIAL NUMBER ON PLATE & PERFORATIONS MUST CORRESPOND TO SERIAL NUMBER ON CAR IN WHICH OWNER PROTECTION PLAN BOOKLET IS PLACED.

AFTER PLATE IS INSTALLED, FACTORY MUST USE ADDRESSOGRAPH IMPRINTING MACHINE (CLASS 500) TO PROOF PRINT ON THE OPPOSITE PAGE CONTAINING BUICK SERVICE MESSAGE.

CHART

PRODUCTION MONTH IDENTIFICATION		OPTION IDENTIFICATION	
MONTH	CODE LETTER	OPTION	CODE NO
JANUARY	1	POWER BRAKES	1
FEBRUARY	2	AIR CONDITIONING	2
MARCH	3	DUAL EXHAUST	3
APRIL	4	RADIO-SONOMATIC	4
MAY	5	RADIO-AM-FM-STEREO	5
JUNE	6	RADIO-AM-FM	6
JULY	7	POWER WINDOWS	7
AUGUST	8	POWER STEERING	8
SEPTEMBER	9	CLIMATE CONTROL	9
OCTOBER	O	CRUISE CONTROL	0
NOVEMBER	N		
DECEMBER	D		

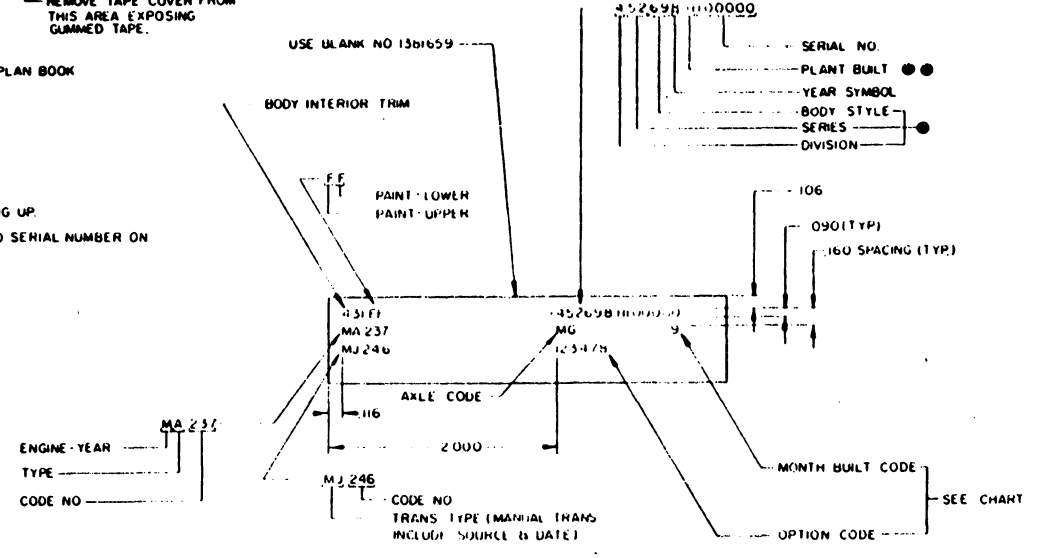

VIEW OF PLATE TWO TIMES SIZE

(●●) SEE VEHICLE IDENTIFICATION INFORMATION AND INSTALLATION IN SECTION "I"

(●) SEE MODEL CHART IN SECTION "O"

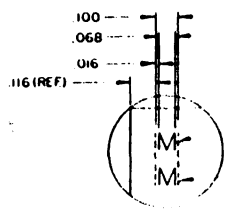

VIEW FOUR TIMES SIZE

"M" IS USED AS A REFERENCE ONLY

ALL CHARACTERS TO BE EMBOSSED BY ASSEMBLY PLANTS

DATE	SYM	REVISION RECORD	AUTH	DR	CK
1968	A	REMOVED			
[illegible]	B	BLANK PLATE [illegible] PLATE ADDED			
[illegible]	[illegible]	[illegible]			
[illegible]	D	[illegible] PANEL [illegible] SHELF [illegible] REMOVED	[illegible]		
[illegible]	E	NOTE ADDED [illegible]	[illegible]		

DO NOT SCALE — REPORT ERRORS

TOLERANCES UNLESS OTHERWISE SPECIFIED
± ALLOWED ON TWO PLACE DECIMALS
± .010 ALLOWED ON THREE PLACE DECIMALS

COMMERCIAL TOLERANCES APPLY TO STANDARD PARTS - ROLLED SECTIONS SHEET METAL GAGES - DRILLED AND PUNCHED HOLES

BURR ALL DRILLED HOLES COUNTERSINK ALL TAPPED HOLES .030 X 80°

DWG DATE	SCALE	DR B S MIESLIK
6-24-66	(SHT 2)	CK CHAS MANOS
FIRST USED 1968 ALL		APPR
REFERENCE		APPR
		APPR
MATERIAL SPEC		

NAME PROTECT O PLATE INSTALLATION

PART NO 1382368 — PAGE NO 1-14.1

DAVE GRAHAM INC. - 2015
ALL RIGHTS RESERVED

ASSEMBLY PLANT IDENTIFICATION				
PART NO	PLANT	ENGINE	PLANT SYM.	SERIAL NO.
1385612	FLINT 04	V 8	H	100001 TO 600000
1385613		L 6		600001 TO 900000
1385619	FLINT 40	V 8		900001 AND UP
1385618	SOUTHGATE	V 8	C	100001 AND UP
1385610	FREMONT	V 8	Z	100001 TO 600000
1385611		L 6		600001 AND UP
1385615	KANSAS CITY KAN.	V 8	X	100001 AND UP
1385617	WILMINGTON	V 8	Y	100001 TO 600000
1387880		L 6		600001 AND UP
1385616	ATLANTA	V 8	D	100001 AND UP
*1385614	BALTIMORE	V 8	B	100001 TO 600000
		L 6		600001 AND UP
*1385614	KANSAS CITY MO.	V 8	K	100001 TO 600001
		L 6		600001 AND UP
1385620	BLOOMFIELD (CKD)	V 8	V	100001 TO 600001
1385621		L 6		600001 AND UP
1385614	BLANK			

* BLANK PLATES 1385614 TO BE FURNISHED TO BALTIMORE AND KANSAS CITY, MO PLANTS TO BE EMBOSSED AT ASSEMBLY.

BODY STYLE CODE NO.	
2 DR COUPE	27
4 DR STATION WAGON 2 SEAT	35
2 DR HARDTOP COUPE	37
4 DR HARDTOP	39
4 DR STATION WAGON 2 SEAT	55
2 DR HARDTOP COUPE	57
4 DR STATION WAGON 3 SEAT	65
2 DR CONVERTIBLE	67
4 DR SEDAN	69
2 DR HARDTOP COUPE	87

1385609

SERIES IDENTIFICATION CHART		
NAME	SERIES CODE NO.	
	6 CYL.	8 CYL.
SPECIAL DELUXE	33	34
SKYLARK	35	
SKYLARK CUSTOM		44
SPORTWAGON		44
SPORTWAGON WD.GRAIN		48
G.S. 400		46
LESABRE		52
LESABRE CUSTOM		54
WILDCAT		64
WILDCAT CUSTOM		66
ELECTRA 225		82
ELECTRA 225 CUSTOM		84
RIVIERA		94

DATE	SYM	REVISION RECORD	AUTH	DR	CK
[illegible]	A	[illegible]			
[illegible]	B	18 R TO 09 R			
[illegible]	C	132/134 DIA HOLE TO 132/134 X 281 SLOT	[illegible]		
[illegible]	D	ADDED NOTE FOR NOTE REVISED	[illegible]		
[illegible]	E	1387880 AND DATA ADDED	[illegible]		

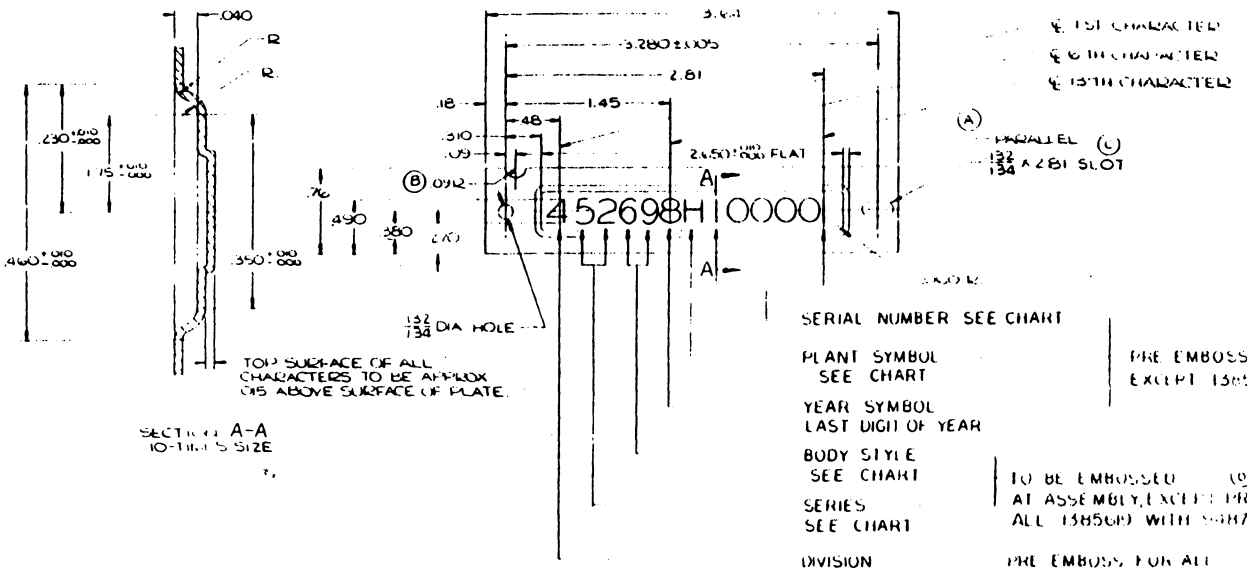

SERIAL NUMBER SEE CHART

PLANT SYMBOL SEE CHART

YEAR SYMBOL LAST DIGIT OF YEAR

BODY STYLE SEE CHART

SERIES SEE CHART

DIVISION CODE 4

PRE EMBOSS FOR ALL PLATES EXCEPT 1385614

TO BE EMBOSSED (D) AT ASSEMBLY, EXCEPT PRE-EMBOSS ALL 1385619 WITH [illegible]

PRE EMBOSS FOR ALL PLATES EXCEPT 1385[illegible]

1385609

FRONT FLAT BLACK TO MATCH FISHER NO WIDE 848 PER GM [illegible] M CLASS CD MUST WITHSTAND STAMPING OF CHARACTERS WITHOUT DELAMINATION

DO NOT SCALE — REPORT ERRORS

TOLERANCES UNLESS OTHERWISE SPECIFIED
± .5 ALLOWED ON TWO PLACE DECIMALS
± .010 ALLOWED ON THREE PLACE DECIMALS

COMMERCIAL TOLERANCES APPLY TO STANDARD PARTS ROLLED SECTIONS SHEET METAL GAGES DRILLED AND PUNCHED HOLES

BURR ALL DRILLED HOLES COUNTERSINK ALL TAPPED HOLES .030 X 90°

DWG DATE [illegible] | SCALE [illegible] | DR [illegible] | CK [illegible] | APPR [illegible] | APPR | APPR

FIRST USED [illegible]

REFERENCE [illegible]

MATERIAL SPEC [illegible]

NAME [illegible] IDENTIFICATION (TAB SHEET)

PART NO 1385609 | PAGE NO 1-15.1

BUICK MOTOR DIVISION GENERAL MOTORS CORPORATION FLINT, MICH. U.S.A.

DAVE GRAHAM INC. - 2015
ALL RIGHTS RESERVED

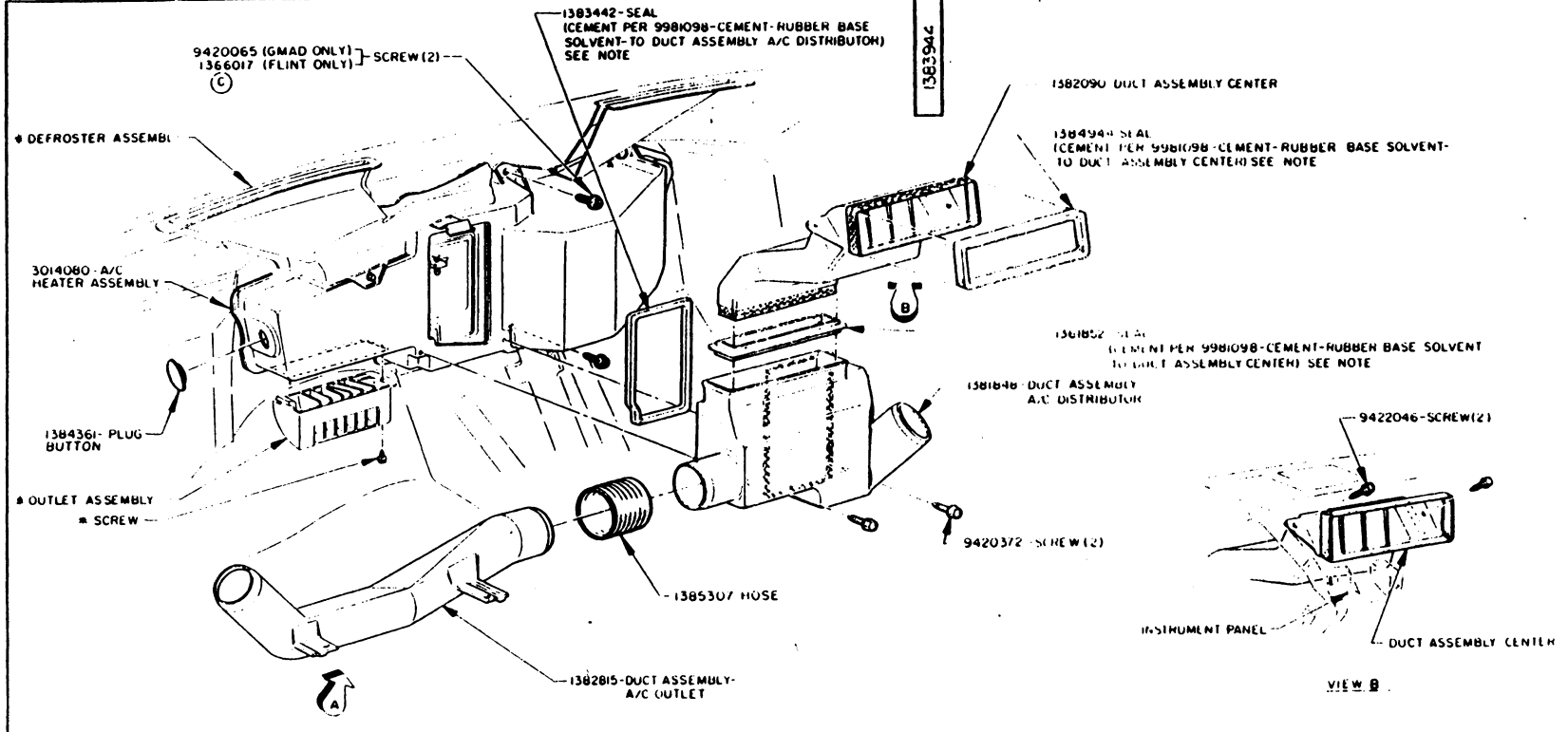

DATE	SYM	REVISION RECORD	AUTH	DR	CK
9 MAR 67	A	2 REMOVED			
14 SEP 67	B	CHANGED TO OUTLET	TEST	LM	
22 DEC 67	C	ADDED 3 NEW TO INSTALL	TEST	LM	

WHEN CEMENTING SEALS IN SUB ASSEMBLY, ALLOW SUFFICIENT DRYING TIME BEFORE FINAL ASM.

* FOR ADDITIONAL INFORMATION SEE HEATER & DEFROSTER INSTALLATION

DO NOT SCALE — REPORT ERRORS

TOLERANCES UNLESS OTHERWISE SPECIFIED
2 PLACE DECIMALS ± .01
3 PLACE DECIMALS ± .010
COMMERCIAL TOLERANCES APPLY TO STANDARD PARTS, ROLLED SECTIONS, SHEET METAL GAGES, DRILLED AND PUNCHED HOLES
BURR ALL DRILLED HOLES, COUNTERSINK ALL TAPPED HOLES .030 X 90°

DSG DATE 11 JUN 66	SCALE	DR W GRADY	
FIRST USED 1968 "A" SERIES		CK	
REFERENCE		APPR	
		APPR	
		APPR	

INSTRUMENT PANEL UNITS

NAME
AIR CONDITIONING INSTALLATION

PART NO 1384944 | PAGE NO 1281
SHEET 1 OF 10 SHEETS

1383944

1383944

DAVE GRAHAM INC. - 2015
ALL RIGHTS RESERVED

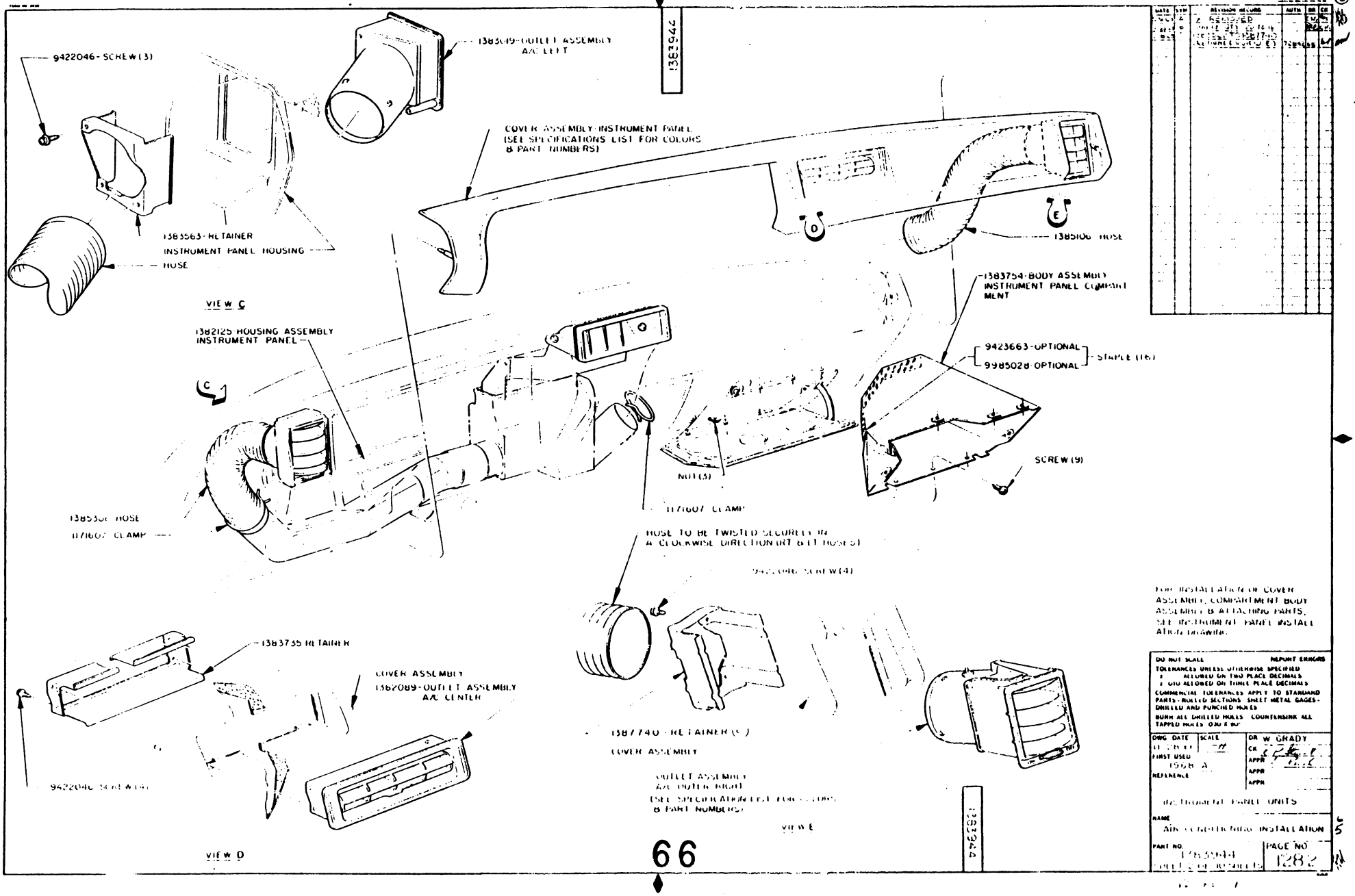

BUICK MOTOR DIVISION
GENERAL MOTORS CORPORATION
FLINT, MICH., U.S.A.

DAVE GRAHAM INC. - 2015
ALL RIGHTS RESERVED

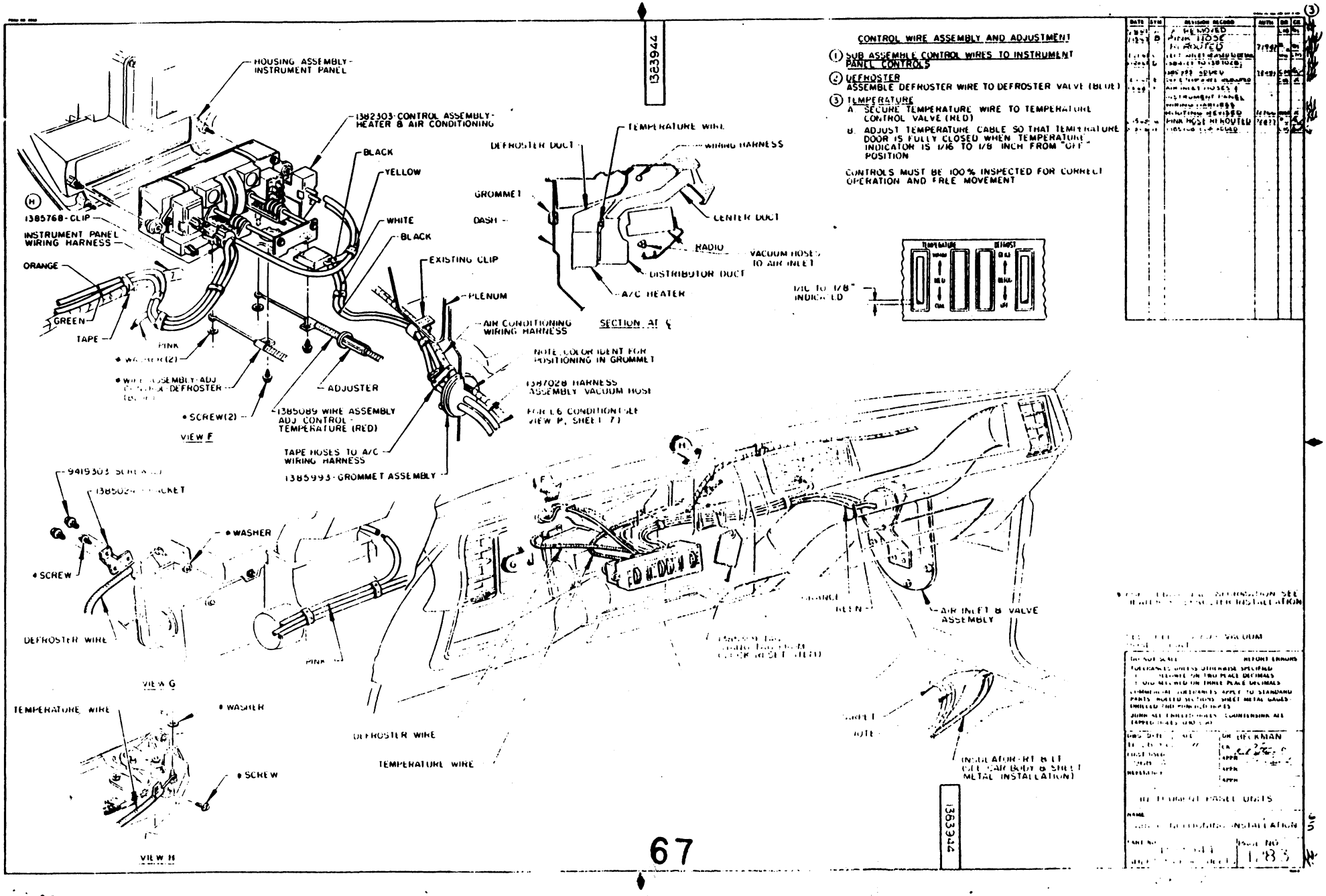

DAVE GRAHAM INC. - 2015
ALL RIGHTS RESERVED

DAVE GRAHAM INC. - 2015
ALL RIGHTS RESERVED

BUICK MOTOR DIVISION
GENERAL MOTORS CORPORATION
FLINT, MICH., U.S.A.

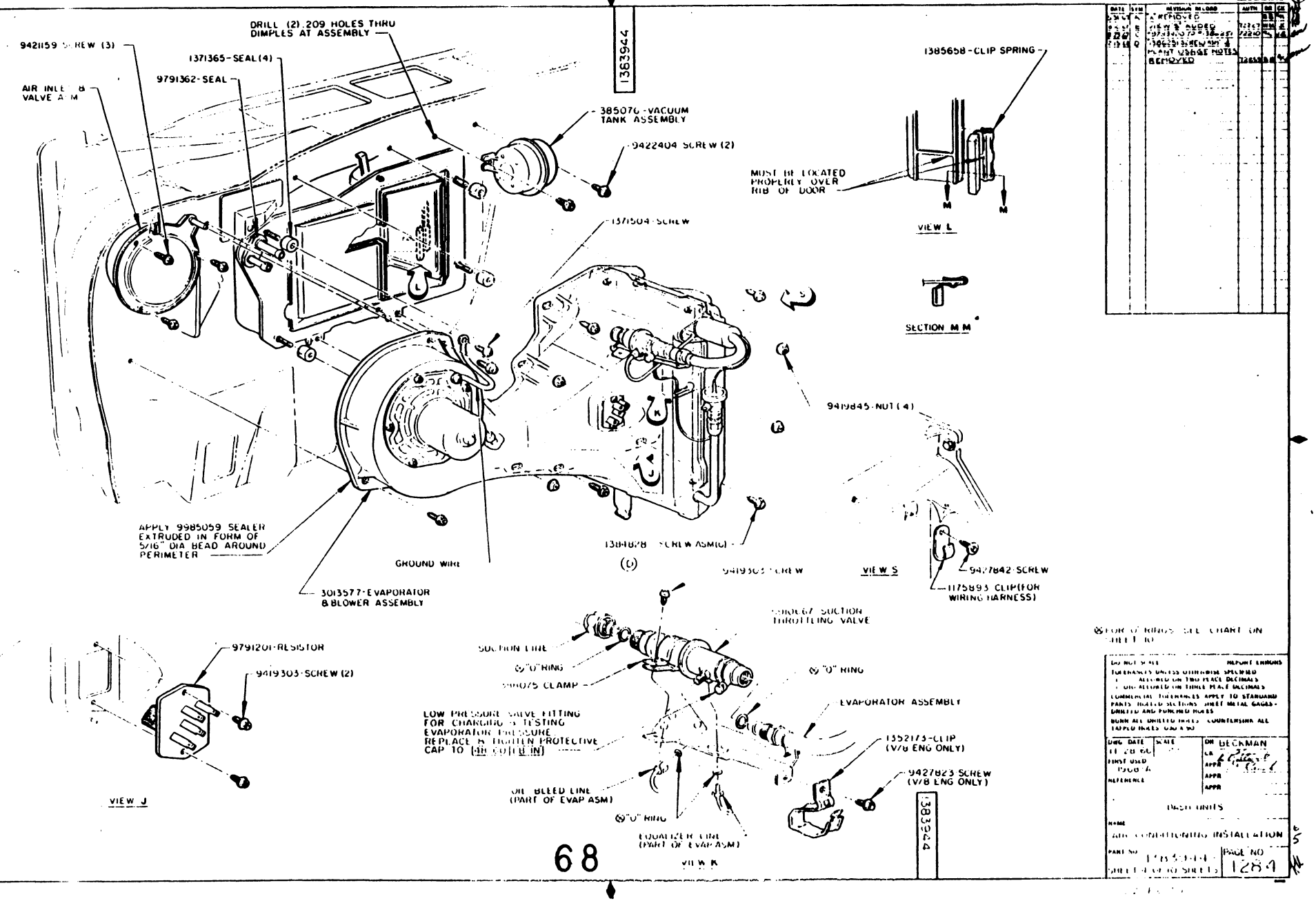

COMPRESSOR ASSEMBLY PRECAUTIONS

1. MAINTAIN NORMAL SUMP DOWN POSITION OF COMPRESSOR AT ALL TIMES TO PREVENT DAMAGE AND OIL LOSS.
2. MAINTAIN COMPRESSOR OIL LEVEL. SEE FACTORY INFORMATION MANUAL FOR PROCEDURE IN CHECKING OIL LEVEL WHEN REPLACING ANY PART IN THE SYSTEM
3. DO NOT STAND, BUMP OR DROP COMPRESSOR ON PULLEY END. A DAMAGED COMPRESSOR MUST NOT BE USED.

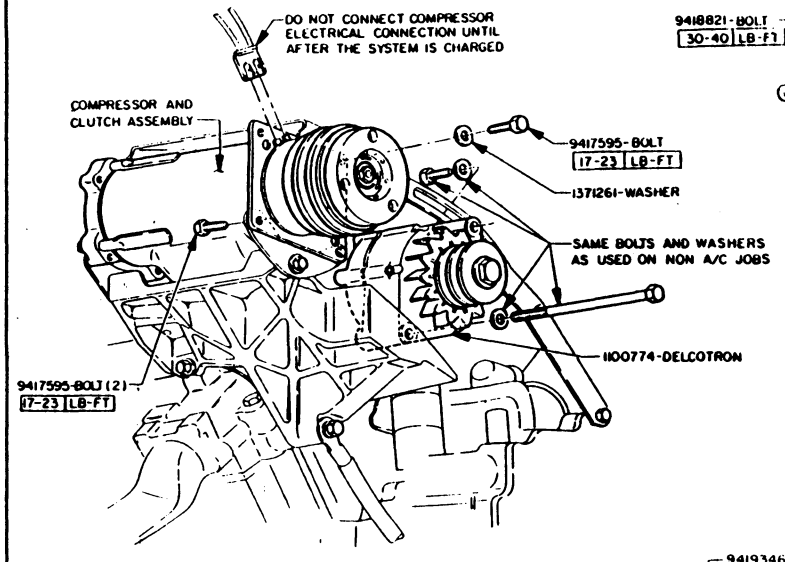

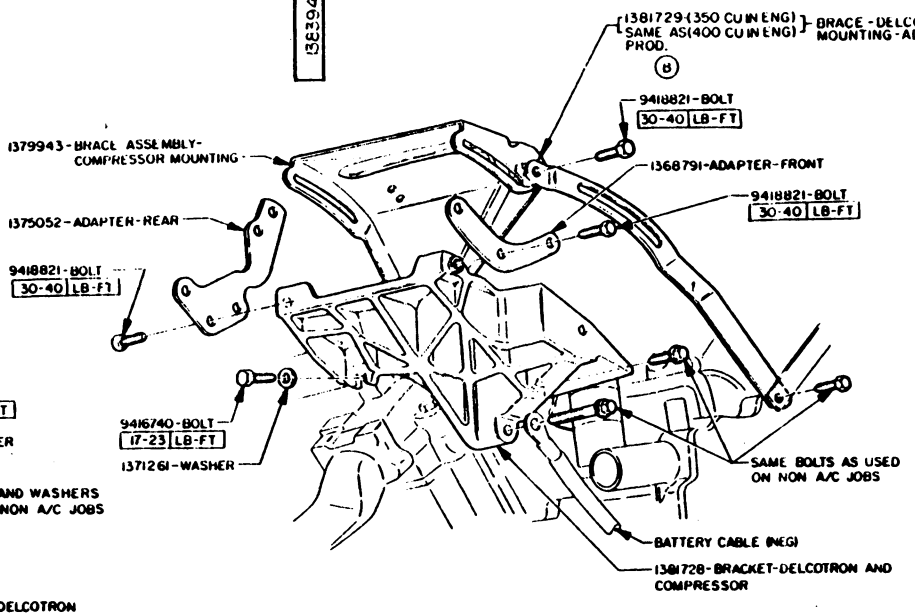

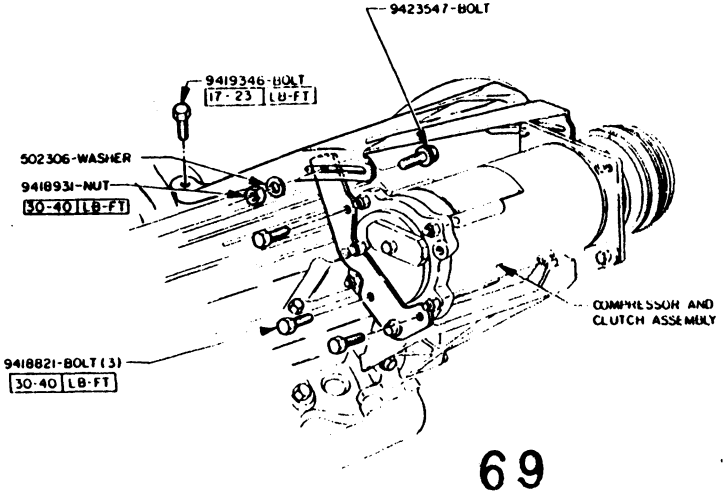

FOR COMPRESSOR, DELCOTRON, PULLEY & BELT INFORMATION SEE PULLEY & BELT CHART

FOR ADDITIONAL INFORMATION SEE ENGINE BUILD-UP INFORMATION

DO NOT SCALE — REPORT ERRORS
TOLERANCES UNLESS OTHERWISE SPECIFIED
± ALLOWED ON TWO PLACE DECIMALS
± .010 ALLOWED ON THREE PLACE DECIMALS
COMMERCIAL TOLERANCES APPLY TO STANDARD PARTS - ROLLED SECTIONS - SHEET METAL GAGES - DRILLED AND PUNCHED HOLES
DEBUR ALL DRILLED HOLES COUNTERSINK ALL TAPPED HOLES .030 X 82°

DWG DATE 5-1-67	SCALE 1/1	DR W GRADY	
FIRST USED 1968-A		CK	
REFERENCE		APPR	
		APPR	
		APPR	

350-400 CU IN ENGINE (V-8)

NAME AIR CONDITIONING INSTALLATION

PART NO 15M3044 — PAGE NO 1285

SHEET 5 OF 10 SHEETS

1383947

1383944

69

GENERAL MOTORS CORPORATION PLANT, MICH., U.S.A.

DAVE GRAHAM INC. - 2015
ALL RIGHTS RESERVED

DAVE GRAHAM INC. - 2015
ALL RIGHTS RESERVED

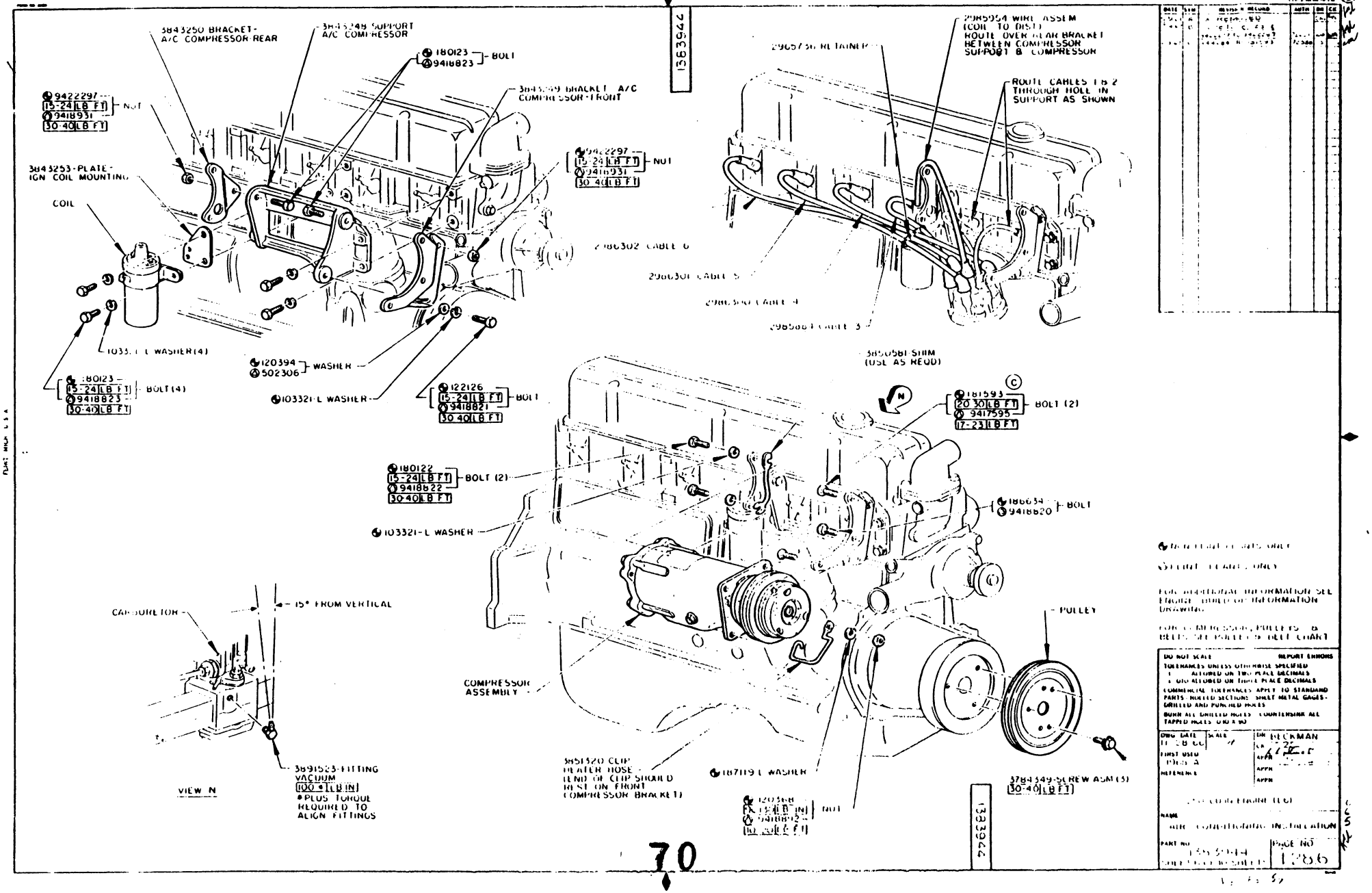

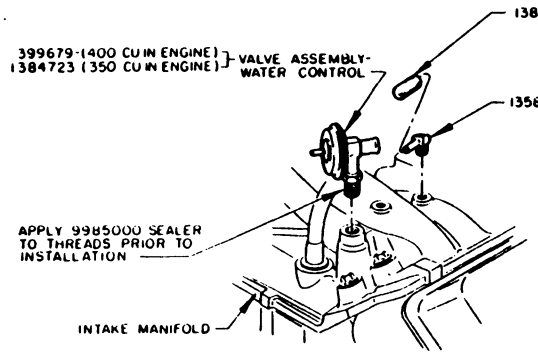

V8 ENGINES ONLY

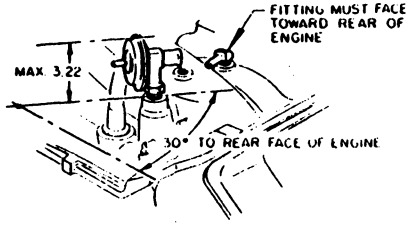

V8 ENGINES ONLY

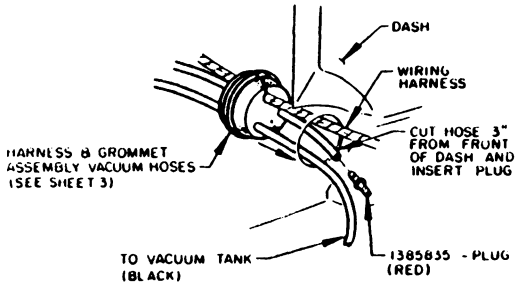

VIEW P
(L6 ENGINES ONLY)

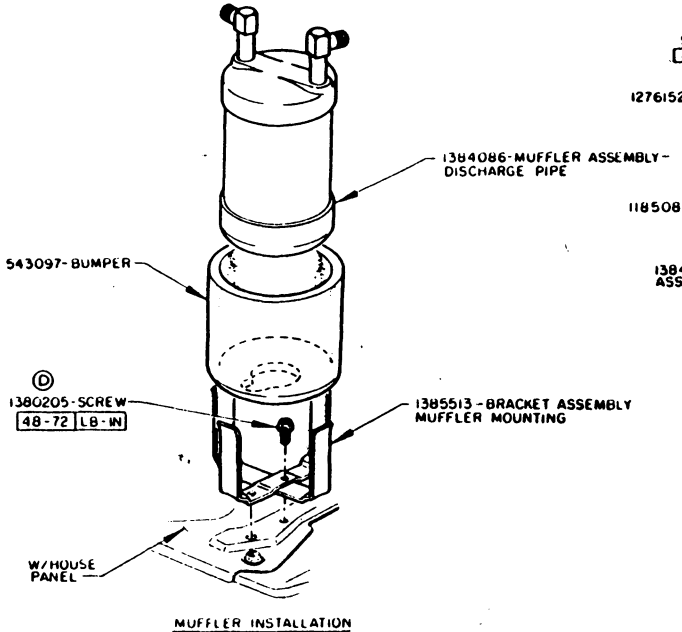

MUFFLER INSTALLATION

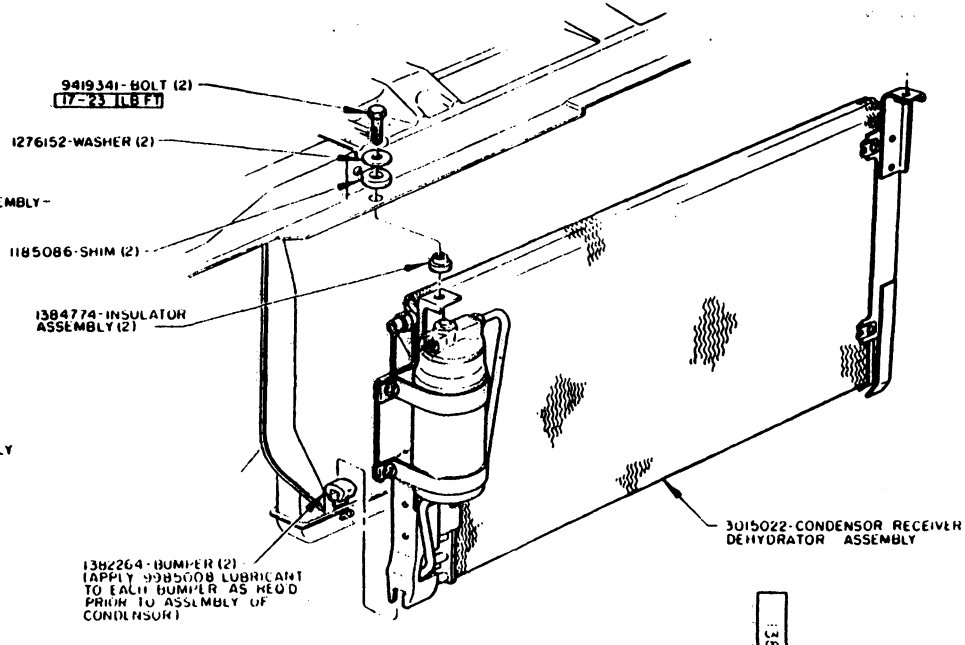

1383944

1383944

71

DO NOT SCALE	REPORT ERRORS
TOLERANCES UNLESS OTHERWISE SPECIFIED: X ALLOWED ON TWO PLACE DECIMALS; X.010 ALLOWED ON THREE PLACE DECIMALS	
COMMERCIAL TOLERANCES APPLY TO STANDARD PARTS - ROLLED SECTIONS - SHEET METAL GAGES - DRILLED AND PUNCHED HOLES	
BURR ALL DRILLED HOLES COUNTERSINK ALL TAPPED HOLES .010 X 80°	
DWG DATE 11 28 66	SCALE -0-
FIRST USED 1968 A	DR BECKMAN
REFERENCE	CK C. Graham
	APPR
	APPR
	APPR

ENGINE UNITS

NAME AIR CONDITIONING INSTALLATION

PART NO 1383944-1 SHEET 2 OF 10 SHEETS

PAGE NO 128.7

DAVE GRAHAM INC. - 2015
ALL RIGHTS RESERVED

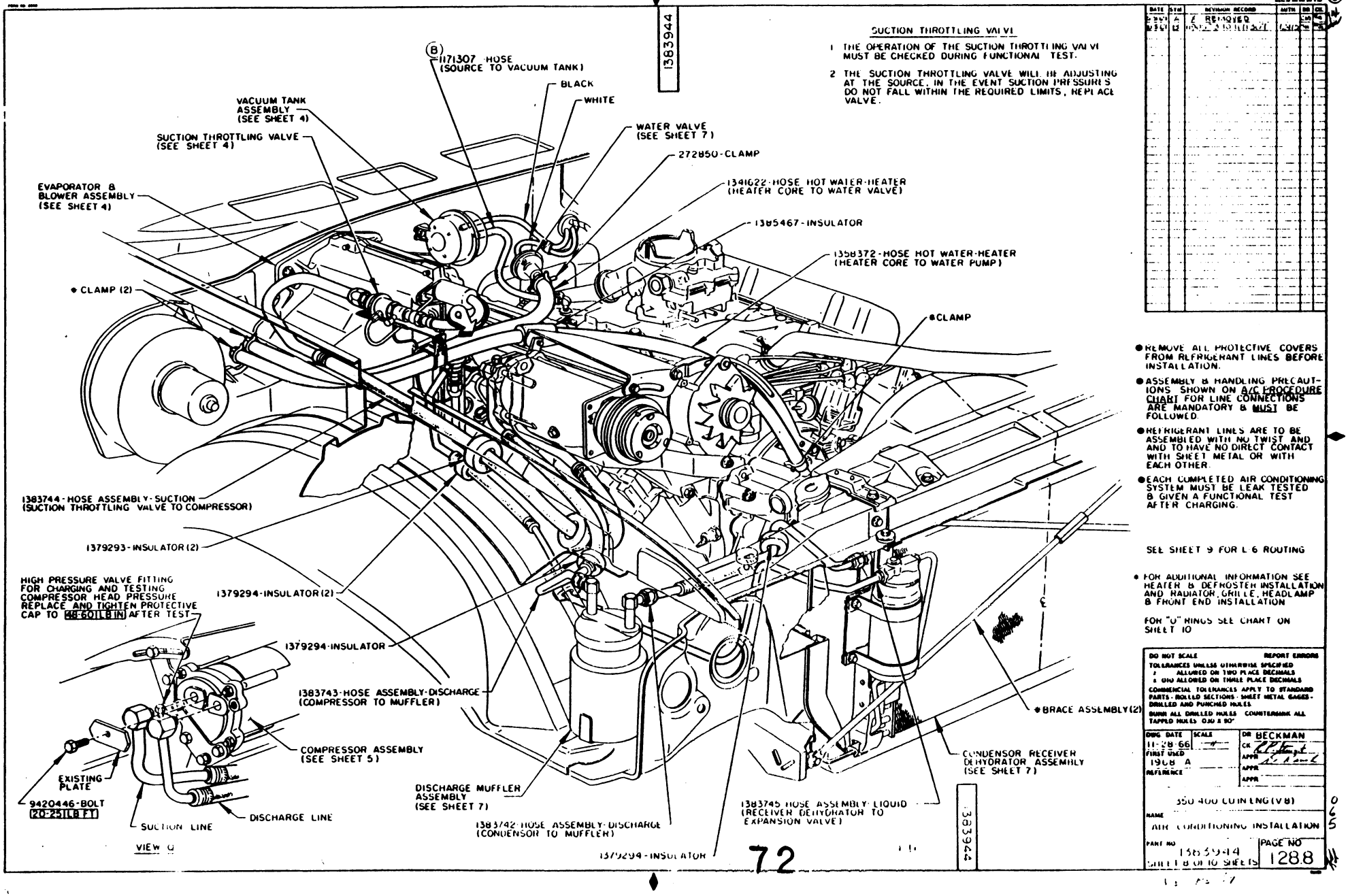

DAVE GRAHAM INC. - 2015
ALL RIGHTS RESERVED

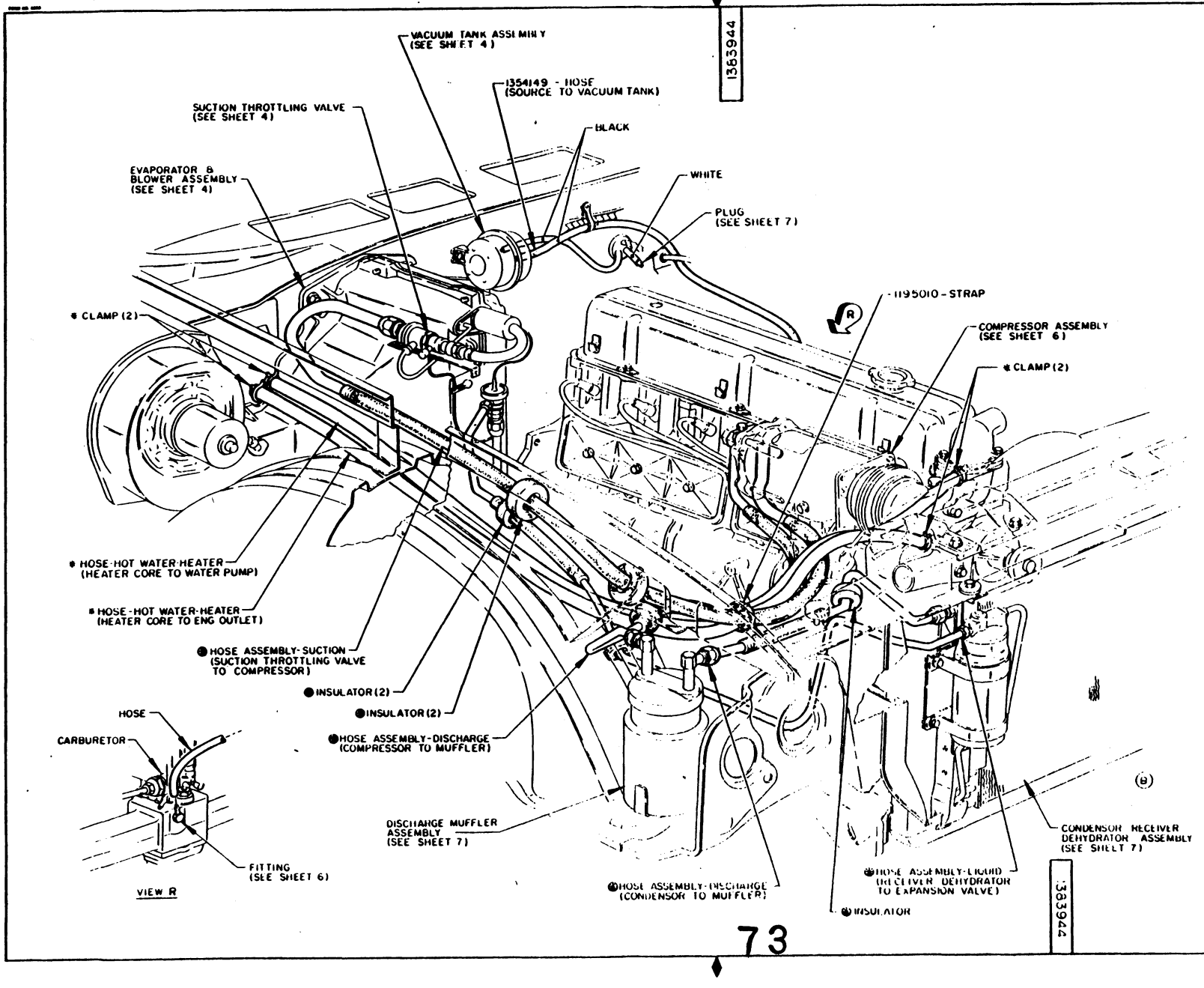

BUICK MOTOR DIVISION
GENERAL MOTORS CORPORATION
FLINT, MICH., U.S.A.

DATE	SYM.	REVISION RECORD	AUTH.	DR.	CK.
[illegible]	A	X REMOVED		CM	
[illegible]	B	SPACE REMOVED	7212	[illegible]	[illegible]

● SAME AS V8 ENGINE COMPARTMENT SEE SHEET 8

* FOR ADDITIONAL INFORMATION SEE HEATER & DEFROSTER INSTALLATION AND RADIATOR, GRILLE, HEADLAMP & FRONT END INSTALLATION

FOR "O" RINGS SEE CHART ON SHEET 10

DO NOT SCALE — REPORT ERRORS

TOLERANCES UNLESS OTHERWISE SPECIFIED
1 ALLOWED ON TWO PLACE DECIMALS
3 .010 ALLOWED ON THREE PLACE DECIMALS
COMMERCIAL TOLERANCES APPLY TO STANDARD PARTS - ROLLED SECTIONS - SHEET METAL GAGES - DRILLED AND PUNCHED HOLES.
BURR ALL DRILLED HOLES. COUNTERSINK ALL TAPPED HOLES .030 X 90°.

DWG DATE	SCALE	DR. GRADY
11 28 [illegible]	[illegible]	CK. [illegible]
FIRST USED 1968 A		APPR. [illegible]
REFERENCE		APPR.
		APPR.

250 CU IN ENGINE (L6)

NAME: AIR CONDITIONING INSTALLATION

PART NO. 1383944 SHEET 9 OF 10 SHEETS — PAGE NO. 1289

73

DAVE GRAHAM INC. - 2015
ALL RIGHTS RESERVED

1383944

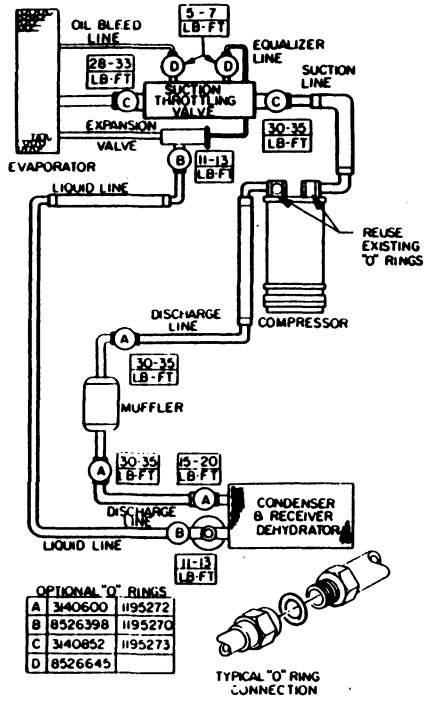

OPTIONAL "O" RINGS

A	3140600	1195272
B	8526398	1195270
C	3140852	1195273
D	8526645	

GASKET "O" RING CHART & TORQUE REQUIREMENTS

USE 9985006 OIL ON ALL JOINTS AND "O" RING GASKETS FOR EASE OF ASSEMBLY.

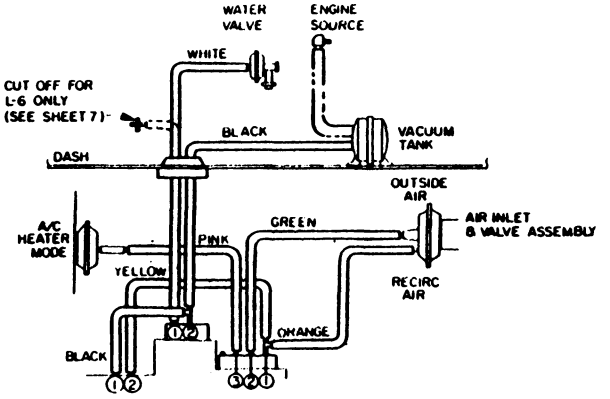

VACUUM HOSE CHART

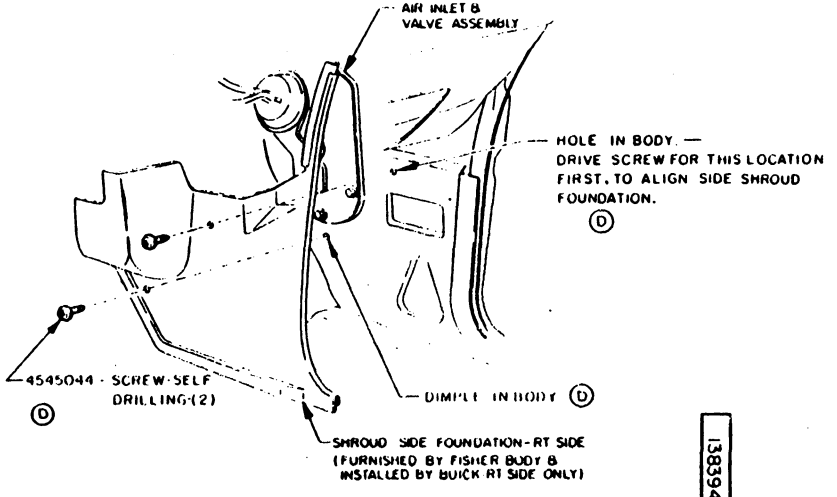

1383944

DATE	SYM	REVISION RECORD	AUTH	DR	CK
10-31-67	A	A: REMOVED			
12-6-67	B	[illegible]			
1-2-68	C	9422747 REMOVED F			
		NOTE RELOCATED.			
9-11-68	D	3456892 SCREW TO			
		9455044 SCREW SELF			
		DRILLING - 2 NOTES			
		ADDED.	T.GOW		

DO NOT SCALE — REPORT ERRORS
TOLERANCES UNLESS OTHERWISE SPECIFIED
± ALLOWED ON TWO PLACE DECIMALS
± .010 ALLOWED ON THREE PLACE DECIMALS
COMMERCIAL TOLERANCES APPLY TO STANDARD PARTS - ROLLED SECTIONS - SHEET METAL GAGES - DRILLED AND PUNCHED HOLES
BREAK ALL SHARP HOLES - COUNTERSINK ALL TAPPED HOLES .010 X 80°

DWG DATE 11-28-66	SCALE 11	DR W. GRADY
FIRST USED 1968 A		CK
REFERENCE		APPR
		APPR
MATERIAL SPEC		APPR

NAME AIR CONDITIONING INSTALLATION

PART NO. 1383944 SHEET 10 OF 10 SHEETS

PAGE NO 1.28.10

74

DAVE GRAHAM INC. - 2015
ALL RIGHTS RESERVED

DAVE GRAHAM INC. - 2015
ALL RIGHTS RESERVED

GENERAL MOTORS CORPORATION
FLINT, MICH. U.S.A.

1387969

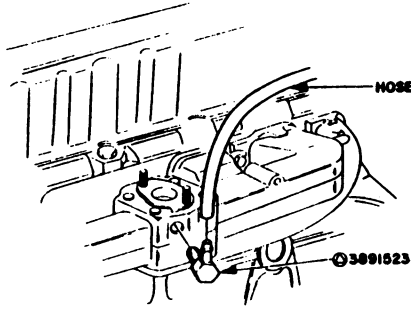

VIEW-C
(L-6 ENGINE)

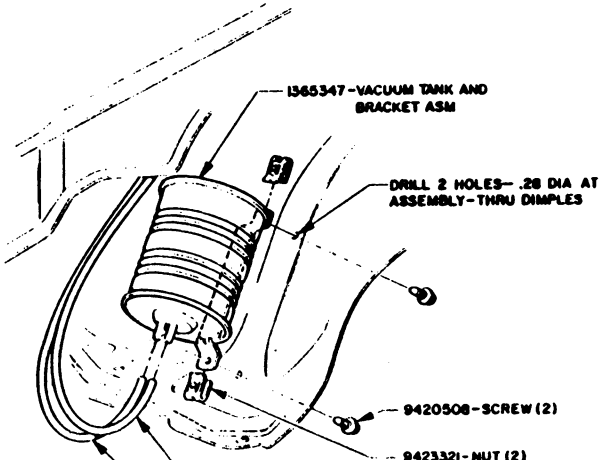

VIEW-A

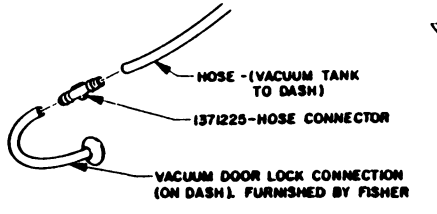

VIEW-D

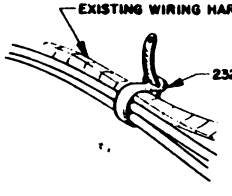

VIEW-B

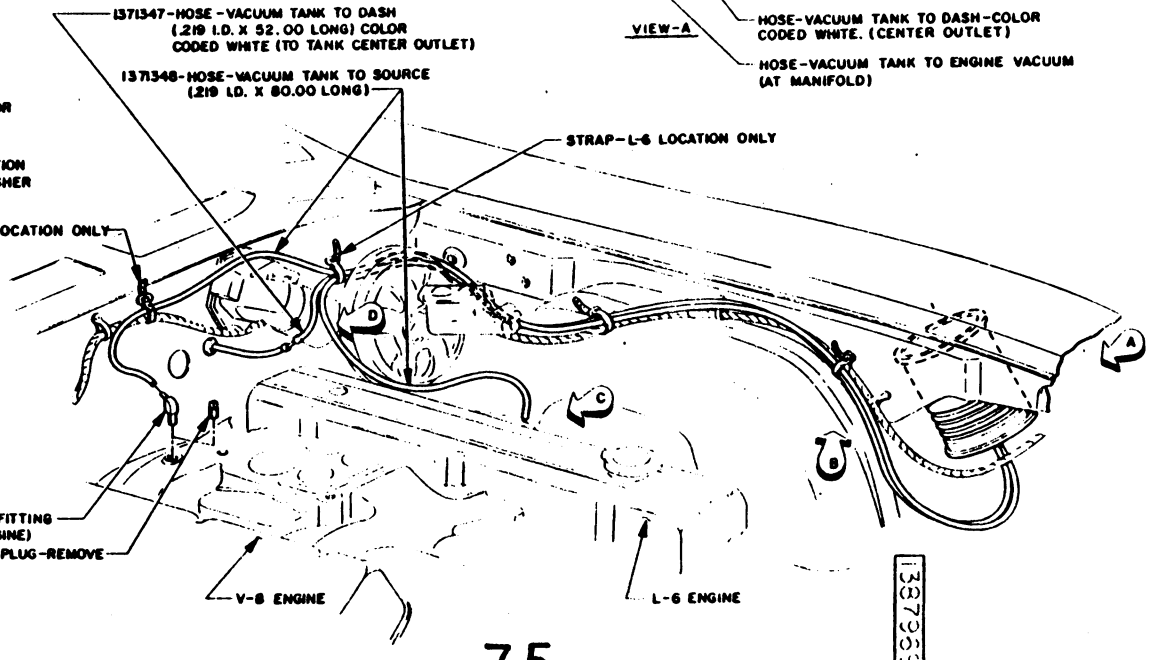

1387969

75

DATE	BY	REVISION RECORD	AUTH	CH	CK
1-29-68	A	DATE ADDED			

Ⓐ

Ⓐ FOR OPTIONS, PART NUMBERS & USAGE SEE VACUUM TUBE ROUTING COMPOSITE SCHEMATIC DWG.

DO NOT SCALE — REPORT ERRORS
TOLERANCES UNLESS OTHERWISE SPECIFIED
± ALLOWED ON TWO PLACE DECIMALS
± .010 ALLOWED ON THREE PLACE DECIMALS
COMMERCIAL TOLERANCES APPLY TO STANDARD PARTS PULLED SECTIONS SHEET METAL GAGES-DRILLED AND PUNCHED HOLES
DEBUR ALL DRILLED HOLES COUNTERSINK ALL TAPPED HOLES 0.30 x 90°

DWG DATE	SCALE	DR W. GRADY
1-29-68		CH
FIRST USED		APPR
1968-A		APPR
REFERENCE		APPR
E.C.R.-72809		
MATERIAL SPEC		

NAME
VACUUM DOOR LOCK INSTALLATION

PART NO	PAGE NO.
1387969	1-29.1

INTER-ORGANIZATION LETTER

DUP GSD 329 CO
REV 3-65

CHEVROLET

TO (See Below) ADDRESS

FROM J. K. Cunningham ADDRESS Chevrolet - Central Office

SUBJECT Frame Drawing 3908660 DATE May 22, 1967

H. E. Eberhard - Atlanta
R. P. Futvoye, Jr. - Baltimore
N. M. Michels - Bloomfield
R. F. Hoover - Framingham
J. I. Beane - Kansas City

The Chevrolet Engineering Department is in the process of revising Frame 2 of drawing 3908660 due to the confusion caused by the heading "Column & Code Letters". The code letters are not the identification for the frame itself but are used by Engineering Department as reference columns. Therefore, item 24 is being added to the drawing which will list the actual identification codes for "A" Body Frames as indicated below.

Part No.	Code
3908661	CH
3908663	CJ
3908665	CF
3908667	CG
3908669	CK
3909646	CL
3909656	CM
3913455	CP
3925193	(Not Presently on Drawing)

97

3943328

Bob Rutha
4184
Tech Center

FACILITIES & PRODUCTION PLANNING DEPARTMENT

J. K. CUNNINGHAM
Supervisor Planning Section

By T. H. Maddox
T. H. Maddox

THM:ar

cc: Messrs. J. A. Stallings
J. L. Pohl
N. Cheal
T. F. Williams
R. L. Reynolds

DAVE GRAHAM INC. - 2015
ALL RIGHTS RESERVED

1963 ENGINE MOUNTS

7-19-67

MODEL	FRONT MTS.	COLOR CODE	TRANS. MT.	COLOR CODE
L-6 ALL	1384945	Yellow	MANUAL 1369534	Orange
			2-SPEED AUTO. 1381016	PINK
V-8 SPECIAL 350 CU. IN.	1383797	Black	MANUAL 1369534	Orange
			2-SPEED AUTO. 1381016	
V-8 EXTENDED WAGON 350 CU. IN.	1383797	Black	MANUAL 1369534	Orange
			2-SPEED AUTO 1381016	PINK
V-8 EXTENDED WAGON 400 - ST400	1385002 RT. 39°	White	ST-400 1381016	PINK
	1385583 LT. 39°	White		
G.S. SKYLARK 400 CU. IN.	1385002 RT. 39°	White	MANUAL 1369534	Orange
	1385583 LT. 39°	White	ST-400 1385718	Blue
LE SABRE 350 CU. IN.	1382968	Yellow	MANUAL 1374748	Green
			ST-300 1374748	Green
			ST-400 1382064	White
ELECTRA WILDCAT 430 CU. IN.	1385626 RT.	Blue	1382064 - 1382063 After Jobs -	White PINK
	1385717 LT.	Green		
RIVIERA 430 CU. IN.	1385626 RT. 30°	Blue	1382064	White
	1385003 LT. 39°	Blue		
Finished				

DAVE GRAHAM INC. - 2015
ALL RIGHTS RESERVED

68 BODY MOUNTS — LESA[illegible] — WILDCAT-ELECTRA

ELECTRA — CONV.		ELECTRA CONV.			WILDCAT — CONV.		WILDCAT CONV.			LESABRE — CONV.		LESABRE CONV.		SERIES MODEL
1385408	G	1376795	P		1385408	G	1376795	P		1385408	G	1376795	P	Sheet Metal
1377367	Y	1377367	Y		1377367	Y	1377367	Y		1377367	Y	1377367	Y	
1382060	G	1376799	Y		1382060	G	1376799	Y		1376799	Y	1376799	Y	#1
1377367	Y	1377367	Y		1376804	B	1376804	B		1376804	B	1376804	B	
1376795	P	1376799	Y		1376795	P	1376799	Y		1376803	B	1376799	Y	#2
1377367	Y	1377367	Y		1376804	B	1376804	B		1376804	B	1376804	B	
1379843	Y	1379843	Y		1379843	Y	1379843	Y		1379843	Y	1379843	Y	#3
1376801	B	1376801	B		1376801	B	1376801	B		1376801	B	1376801	B	
1376802	B	1376802	B		1376802	B	1376802	B		1376802	B	1376802	B	#4
1376802	B	1376802	B		1376802	B	1376802	B		1376802	B	1376802	B	#5
1382062	W	1382062	W		1382062	W	1382062	W		1382062	W	1382062	W	#6
1376804	B	1376804	B		1376804	B	1376804	B		1376804	B	1376804	B	
1382062	W	1382062	W		1382062	W	1382062	W		1382062	W	1382062	W	#7
1376804	B	1376804	B		1376804	B	1376804	B		1376804	B	1376804	B	

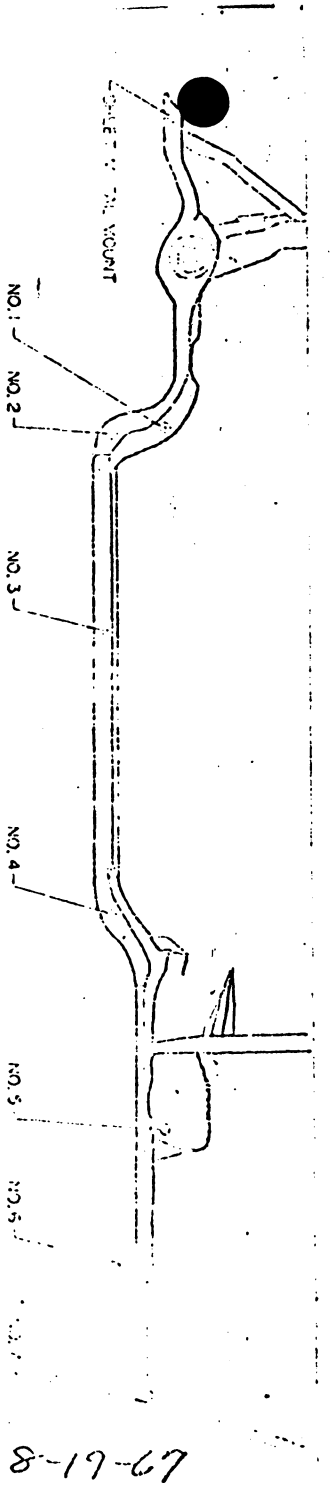

8-19-67

DAVE GRAHAM INC. - 2015
ALL RIGHTS RESERVED

161 BODY MOUNTS — SPECIAL SERIES

	Station Wagon 400		CS-400		Reg. A L-6 ; V-8		Series Model
	1383301	B	1383301	B	1383301	B	Steel Body
	1377367	Y	1377367	Y	1377367	Y	
	1383277	W	1385567	O	1383301	B	#1
	1377367	Y	1377367	Y	1377367	Y	
	1383277	W	1385567	O	1383301	B	#2
	1377367	Y	1377367	Y	1377367	Y	
	1383298	B	1383298	B	1383298	B	#3
	1377367	Y	1377367	Y	1377367	Y	
	1383277	B	1383277	B	1383277	B	#4
	1383297	B	1383277	B	1383277	B	#5
	1383301	B	1383301	B	1383301	B	#6
	1377367	Y	1377367	Y	1377367	Y	
	1383301	B	1383301	B	1383301	B	#7
	1377367	Y	1377367	Y	1377367	Y	

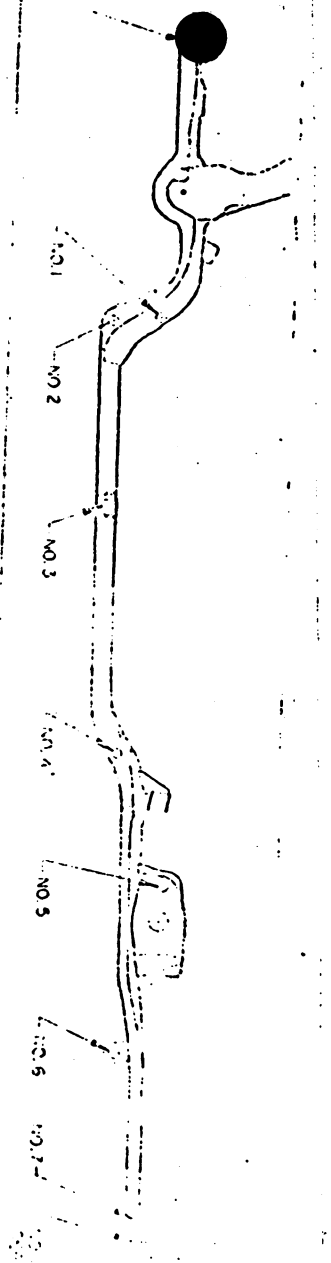

8-19-67

DAVE GRAHAM INC. - 2015
ALL RIGHTS RESERVED

1968 BODY MOUNTS – RIV #9

Riv.		Series & Model
1385579	B	Sheet Metal
1377367	Y	
1385575	B	#1
1376797	B	
1385575	B	#2
1377367	Y	
—		#3
—		
1376803	B	#4
1377367	Y	
1385579	B	#5
1377367	Y	
1385579	B	#6
1377367	Y	
		#7

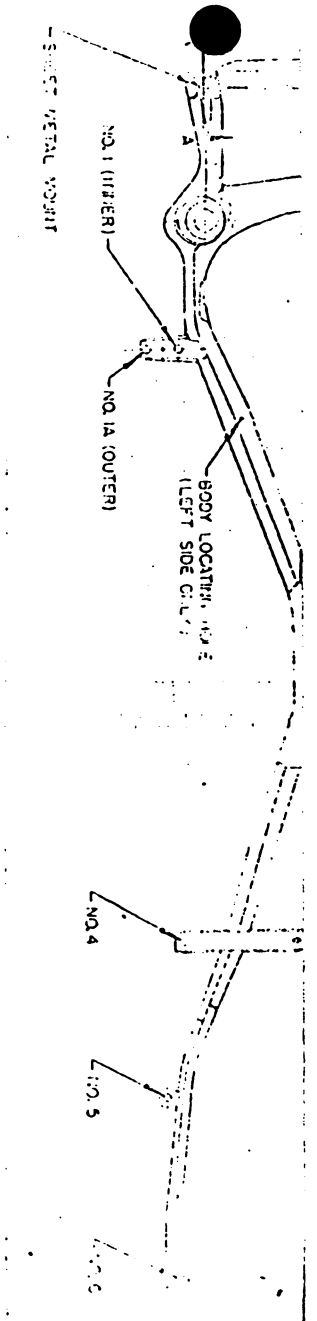

8-19-67

DAVE GRAHAM INC. - 2015
ALL RIGHTS RESERVED

	PAGES
Chassis Paint Requirements - Chart	2-2.1
Frames & Body Mounting Frame Identification	2-3.1

7-31-67
PART NUMBER- 1383770
PAGE NUMBER- 2-1.0

DAVE GRAHAM INC. - 2015
ALL RIGHTS RESERVED

DAVE GRAHAM INC. - 2015
ALL RIGHTS RESERVED

1385380

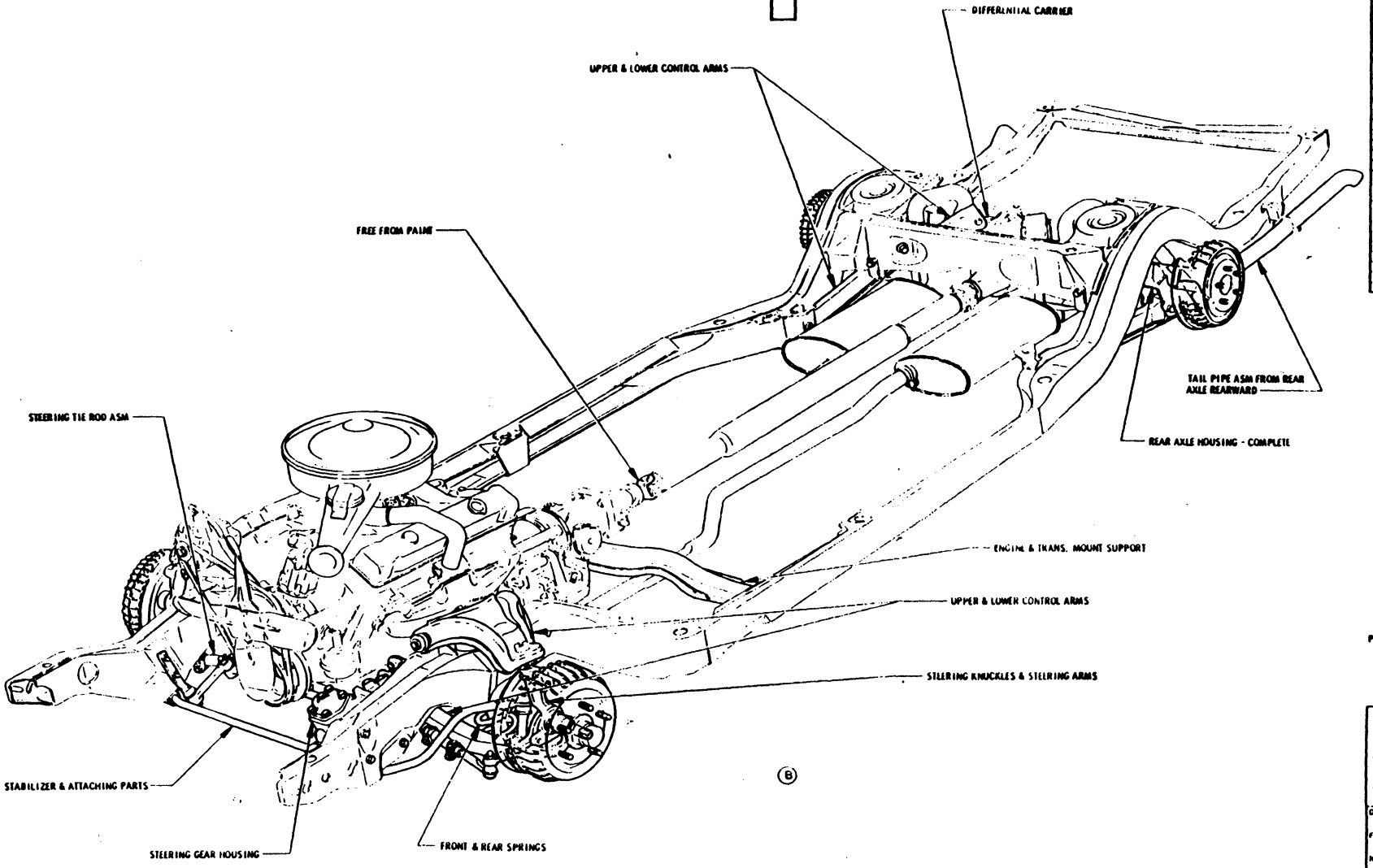

DATE	SYM	REVISION RECORD	MTH	DR	CK
1-3-62	A	X REMOVED			
1-7-61	B	NOTE REMOVED			

PAINT ITEMS INDICATED BUICK SPEC. 30L

DO NOT SCALE — REPORT ERRORS
TOLERANCES UNLESS OTHERWISE SPECIFIED
± ALLOWED ON TWO PLACE DECIMALS
± .010 ALLOWED ON THREE PLACE DECIMALS
COMMERCIAL TOLERANCES APPLY TO STANDARD PARTS - ROLLED SECTIONS - SHEET METAL GAGES - DRILLED AND PUNCHED HOLES
BURN ALL DRILLED HOLES COUNTERSINK ALL TAPPED HOLES .030 X 90°

DWG DATE 3-31-67 | SCALE | DR R. SHIER
FIRST USED 1968 - A | CK
REFERENCE | APPR
MATERIAL SPEC | APPR
NAME CHART - CHASSIS PAINT
PART NO 1385380 | PAGE NO. 2-2.1

1385380

1385168

FRAME IDENTIFICATION CHART			
PART NO	CODE	SERIES	BODY STYLE
3908663	CJ	433-34-35-44	27-37
3925693	CB	446	37
3908667	CG	434	35
3908661	CH	433-35-44	69
3913455	CP	444	39
3908665	CF	444-46	67
399675	GV	444-48	55-65

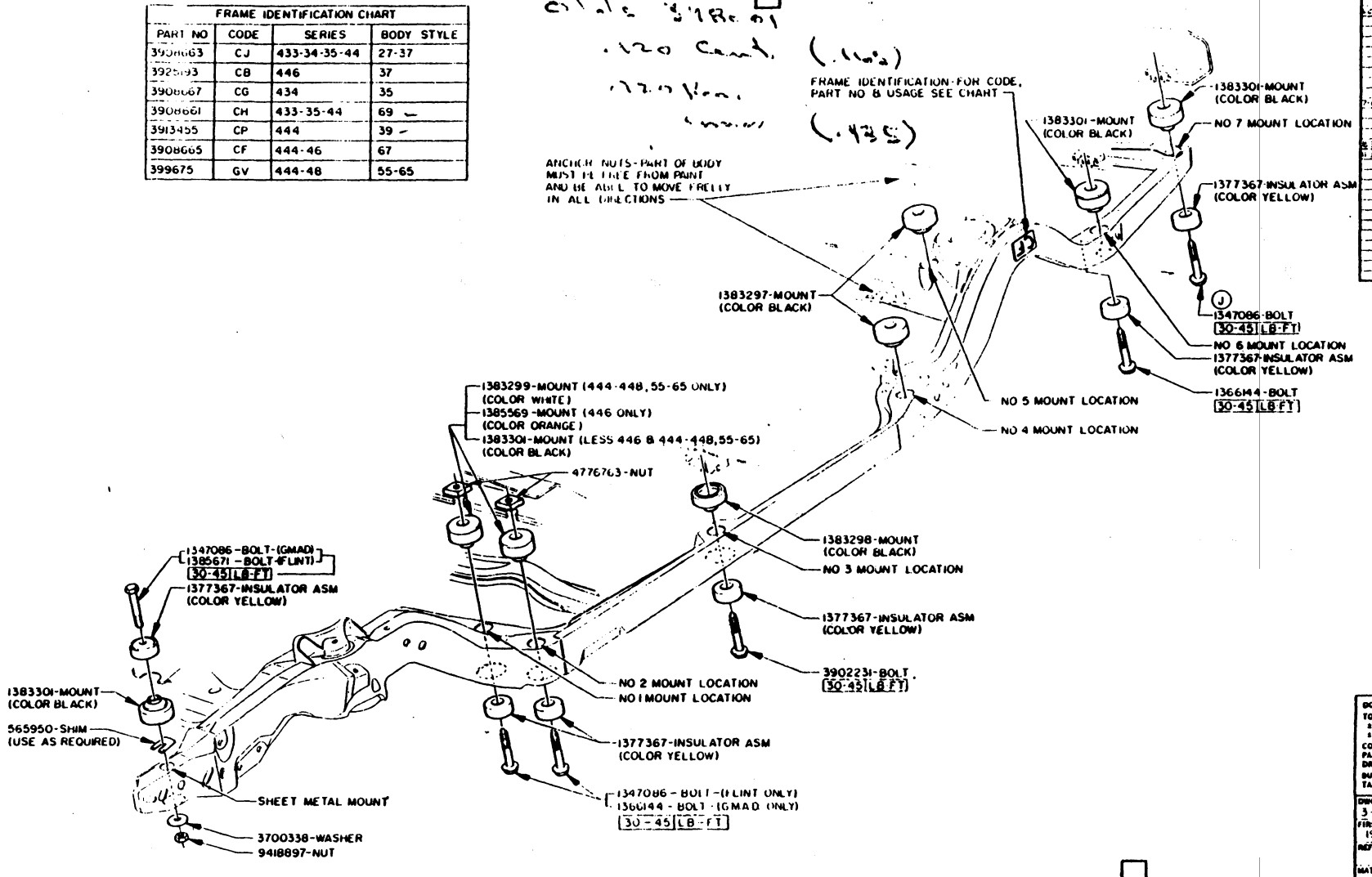

DATE	SYM	REVISION RECORD	APPR	DR	CK
1-24-67	A	A REVISED		RS	RS
9-13-67	B	CB ADDED		RS	RS
1-8-68	C	1385569 & 1383298 ADDED			
5-16-68	D	1383298 TO 1383301		RS	AT
		FLINT 1347086 ADDED	71744	GM	AT
6-16-68	E	BE TO CJ BN TO CB BP TO CG EC TO CH BM TO CP BD TO CE		GM	RS
7-26-68	F	3902231 TO 3902232			
		1366144 BOLT TO 1366144 BOLT (GMAD ONLY)			
		ANCHOR NUTS (PART OF BODY) LOCATIONS SEE			
		BODY NOT REQUIRED, NOTE			
		REL SEATED 4776763 NUT			
		1347086-BOLT (FLINT ONLY) ADDED	71830	RS	RS
7-29-68	G	1383569 TO 1383299			
		ORANGE TO WHITE &			
		1383300 TO 1385569			
		LIGHT BROWN TO ORANGE	72041	RS	RS
8-26-68	H	1383298 TO 1383301	72519	RS	RS
11-27-68	J	1366144 TO 1347086	72919	RS	RS

DO NOT SCALE — REPORT ERRORS
TOLERANCES UNLESS OTHERWISE SPECIFIED
.X ALLOWED ON TWO PLACE DECIMALS
.XX .010 ALLOWED ON THREE PLACE DECIMALS
COMMERCIAL TOLERANCES APPLY TO STANDARD PARTS - ROLLED SECTIONS - SHEET METAL GAGES - DRILLED AND PUNCHED HOLES
BURR ALL DRILLED HOLES COUNTERSINK ALL TAPPED HOLES .030 X 80°

DWG. DATE	SCALE	DR R. SHER
3-13-67	—	CK
FIRST USED 1968-A		APPR
REFERENCE		APPR
MATERIAL SPEC.		APPR

NAME BODY MOUNTING & FRAME USAGE INFORMATION DRAWING

PART NO. 1385168 PAGE NO. 2-3.1

DAVE GRAHAM INC. - 2015
ALL RIGHTS RESERVED

	PAGES
Front Wheel Suspension Installations Caster & Camber Adjustment Lower Control Tightening & Torque	3-2.1
Wheel Alignment - Chassis Trim Dim & Caster & Camber Dim - Opt - Trim Heights for G.M.A.D. Div.	3-3.1
*Shock Absorbers and Spring Data (Front and Rear)	3-4.1
*Shock Absorber & Spring Data Front & Rear (Heavy Duty)	3-5.1

*5-8-67

PART NUMBER- 1383770

PAGE NUMBER- 3-1.0

DAVE GRAHAM INC. - 2015
ALL RIGHTS RESERVED

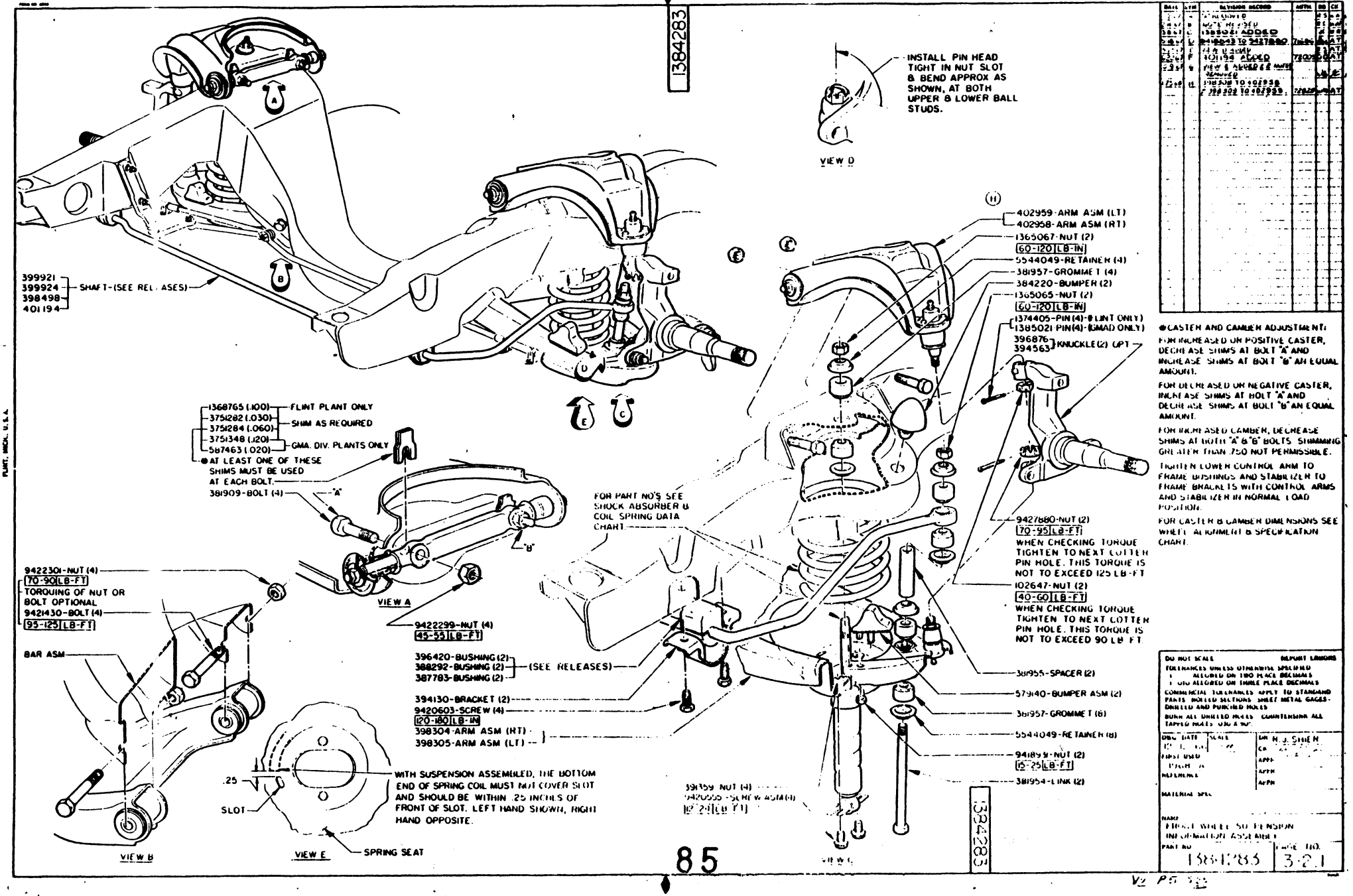

DAVE GRAHAM INC. - 2015
ALL RIGHTS RESERVED

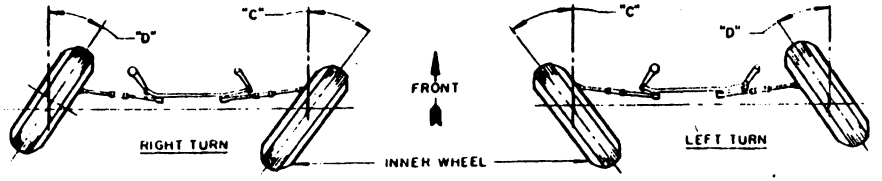

1386391

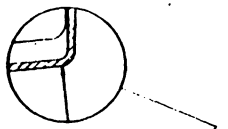

NOTE: STEERING WHEEL MUST BE HELD IN STRAIGHT AHEAD POSITION DURING TOE-IN SETTING. AFTER TOE-IN SET, THE STEERING WHEEL MUST BE IN STRAIGHT AHEAD POSITION WITHIN 1.00 LEFT AND .62 RIGHT.

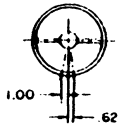

TURNING ANGLES

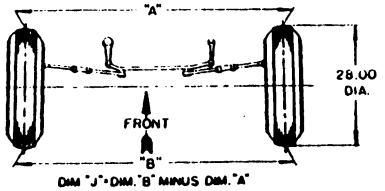

DIM "J" = DIM. "B" MINUS DIM. "A"

TOE-IN

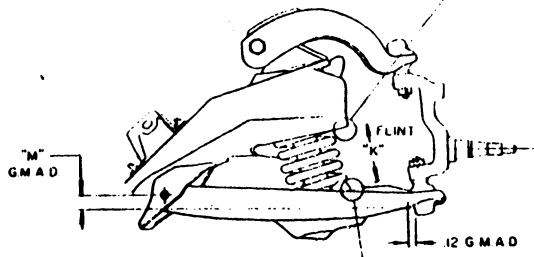

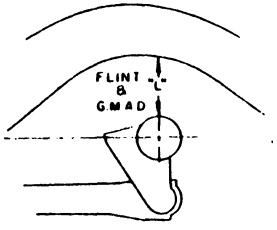

REAR

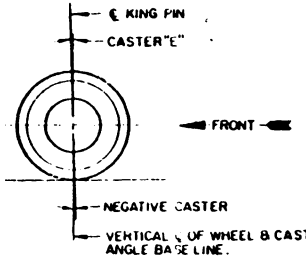

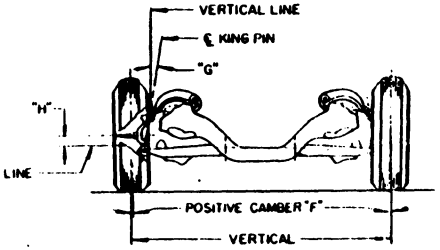

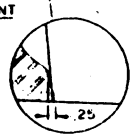

FRONT

.25 OUTBOARD OF COMPRESSION BUMPER ON CENTER OF FRONT FLANGE, OF LOWER CONTROL ARM

CHASSIS TRIM DIM.

THESE DIMENSIONS DO NOT APPLY TO OPTIONAL SPRINGS.

CASTER & CAMBER

MODEL	CHASSIS TRIM DIM. FRONT "K" ±.18 ●● ◑ CURB WEIGHT	FRONT ● NORMAL LOAD DESIGN	FRONT ● NORMAL LOAD ACTUAL	CHASSIS TRIM DIM. REAR "L" ±.24 ◑ CURB WEIGHT	REAR ● NORMAL LOAD DESIGN	REAR ● NORMAL LOAD ACTUAL	FULL TURN INNER WHEEL "C" MANUAL & POWER	FULL TURN OUTER WHEEL "D" MANUAL & POWER	OUTER WHEEL ANGLE WITH INNER WHEEL AT 20° MANUAL & POWER	CASTER ● "E" ±0°30' ◑ CURB WEIGHT	CAMBER ● "F" ±0°30' ◑ CURB WEIGHT	STEERING AXIS ANGLE "G" AT 0° CAMBER	TRIM HEIGHT "H" DESIGN FRT	TRIM HEIGHT "H" DESIGN RR	TOE-IN "J" ◑ CURB WEIGHT
43327															
43369															
43537	3.77	3.06	L-6 2.97 V-8 3.03	4.98	3.58	3.21									
43569															
43435	4.51	3.06	3.64	6.29	3.58	4.46									
43437	3.77	3.06	3.18	4.98	3.58	3.65									
44437													2.20	2.20	
44467															
44439	3.77	3.06	3.03	4.98	3.58	3.21	36°	33° 35'	18° 38'	0°30' NEG.	0°30' POS	9°			12 10 25
44469															
44637															
44667	3.85	3.06	3.23	4.70	3.58	3.07									
44455															
44465															
44656	4.48	3.59	3.57	5.61	3.97	3.89							1.50	.90	
44665															

OPTIONAL TRIM HEIGHTS FOR G.M.A.D. PLANTS AND CORRESPONDING CASTER & CAMBER SETTINGS AT THESE HEIGHTS.

CASTER ●"E"	CAMBER ●"F"	FRONT "M" SEDAN	FRONT "M" WAGON	REAR "L" SEDAN	REAR "L" WAGON
1° NEG. ±0°30'	0°45' POS. ±0°30'	1.20	1.20	7.40	7.80

●● ADD .06 TO "K" NORMAL LOAD ACTUAL FOR CARS WITH AIR CONDITIONING

◑ LEFT & RIGHT WHEEL ANGLES TO BE WITHIN 0° 30' OF EACH OTHER.

● NORMAL LOAD THREE SEAT WAGON TRIM DIMENSIONS DETERMINED WITH 5 PASSENGER LOAD 2-150 POUND PASSENGERS IN FRONT SEAT AND 3-150 POUND PASSENGERS IN CENTER SEAT.

● NORMAL LOAD TWO SEAT WAGON TRIM DIMENSIONS DETERMINED WITH 5 PASSENGER LOAD, 2-150 POUND PASSENGERS IN FRONT SEAT AND 3-150 POUND PASSENGERS IN REAR SEAT.

● NORMAL LOAD SEDAN TRIM DIMENSIONS DETERMINED WITH 4 PASSENGER LOAD, 2-150 POUND PASSENGERS IN FRONT SEAT AND 2-150 POUND PASSENGERS IN REAR SEAT.

◑ CURB WEIGHT INCLUDES FULL TANK GAS, OIL, WATER & SPARE TIRE

DO NOT SCALE — REPORT ERRORS
TOLERANCES UNLESS OTHERWISE SPECIFIED
± ALLOWED ON TWO PLACE DECIMALS
± .010 ALLOWED ON THREE PLACE DECIMALS
COMMERCIAL TOLERANCES APPLY TO STANDARD PARTS - ROLLED SECTIONS - SHEET METAL GAGES - DRILLED AND PUNCHED HOLES
BURR ALL DRILLED HOLES COUNTERSINK ALL TAPPED HOLES .030 X 80°

DWG. DATE 8 14 67	SCALE
FIRST USED 1968-A	DR CHAS MANOS
REFERENCE	CK
	APPR
	APPR
	APPR

FLINT & G.M.A.D. PLANTS

NAME CHART WHEEL ALIGNMENT & CHASSIS TRIM DIMENSIONS

PART NO 1386391 | PAGE NO 3-31

1386391

DAVE GRAHAM INC. - 2015
ALL RIGHTS RESERVED

1385742

BODIES	FRONT CHASSIS SPRINGS														REAR CHASSIS SPRINGS				FRONT SHOCK ABSORBERS				REAR SHOCK ABSORBERS					
	LESS AUTO. LEVEL CONTROL								WITH AUTO. LEVEL CONTROL						LESS AUTO. LEVEL CONTROL		WITH AUTO. LEVEL CONTROL		LESS AUTO. LEVEL CONTROL		WITH AUTO. LEVEL CONTROL		LESS AUTO. LEVEL CONTROL		WITH AUTO. LEVEL CONTROL			
	LESS AIR CONDITIONING				WITH AIR CONDITIONING				LESS AIR CONDITIONING				WITH AIR CONDITIONING															
	PART NO'S.		TAPE IDENT. LETTERS		PART NO'S.		TAPE IDENT. LETTERS		PART NO'S.		TAPE IDENT. LETTERS		PART NO'S.		TAPE IDENT. LETTERS													
	LT. SIDE	RT. SIDE	LT. SIDE	RT. SIDE	LT. SIDE	RT. SIDE	LT. SIDE	RT. SIDE	LT. SIDE	RT. SIDE	LT. SIDE	RT. SIDE	LT. SIDE	RT. SIDE	LT. SIDE	RT. SIDE	PART NO'S.	TAPE IDENT. LETTERS	PART NO'S.	TAPE IDENT. LETTERS	PART NO'S.	IDENT. CODE	PART NO'S.	IDENT. CODE	PART NO'S.	IDENT. CODE	PART NO'S.		IDENT CODE	
																									LT. SIDE	RT. SIDE	LT. SIDE	RT. SIDE
43527	402057	402059	B2	B3	401752	400879	L3	L11							9788444	NO			3492812	SM			3492813	SM				
43549	402057	402059	B2	B3	401752	400879	L3	L11							9788444	NO			3492812	SM			3492813	SM				
43537	402057	402059	B2	B3	401752	400879	L3	L11							9788444	NO			3492812	SM			3492813	SM				
43549	402057	402059	B2	B3	401752	400879	L3	L11							9788444	NO			3492812	SM			3492813	SM				
43527	401752	401188	L3	LM	402060	400874	R4	SA							9787043	NB			3492812	SM			3492813	SM				
43549	401752	401188	L3	LM	402060	400874	R4	SA							9787043	NB			3492812	SM			3492813	SM				
43537	401752	401188	L3	LM	402060	400874	R4	SA							9787043	NB			3492812	SM			3492813	SM				
43549	401752	401188	L3	LM	402060	400874	R4	SA							9787043	NB			3492812	SM			3492813	SM				
43535	400880	400880	LW	LW	401173	401173	S0	S0							9793151	NB			3492812	SM			3492813	SM				
43537	401753	401754	L5	L6	400993	400995	S5	S2							9778686	PK			3492812	SS			3192813	SM				
44437	401752	401188	L3	LM	402060	400874	R4	SA							9787043	NB			3492812	SM			3492813	SM				
44447	401752	401188	L3	LM	402060	400874	R4	SA							9787043	NB			3492812	SM			3492813	SM				
44439	400879	400880	LW	LW	402061	401173	R5	S0							9787261	MM			3492812	SM			3492813	SM				
44469	401752	401188	L3	LM	402060	400874	R4	SA							9787043	NB			3492812	SM			3192813	SM				
44437	400329	400330	SL	SV	400994	400997	SY	RE							9794249	NO			3492816	SS			3192813	SM				
44447	400329	400330	SL	SV	400994	400997	SY	RE							9794249	NO			3492816	SS			3192813	SM				
44455	400980	400980	SF	SF	400985	400985	SJ	SJ	400986	400986	SF	SF	400985	400985	SJ	SJ	9793157	NB	9789091	NI	3492814	SP	3492845	MM	3173413	3686566	JG	SW
44445	400980	400980	SF	SF	400985	400985	SJ	SJ	400986	400986	SF	SF	400985	400985	SJ	SJ	9793158	NJ	9793159	NB	3492814	SP	3492845	MM	3173413	3686566	JG	SW
44458	400980	400980	SF	SF	400985	400985	SJ	SJ	400986	400986	SF	SF	400985	400985	SJ	SJ	9793157	NB	9789091	NI	3492814	SP	3492845	MM	3173413	3686566	JG	SW
44445	400980	400980	SF	SF	400985	400985	SJ	SJ	400986	400986	SF	SF	400985	400985	SJ	SJ	9793158	NJ	9793159	NB	3492814	SP	3492845	MM	3173413	3686566	JG	SW
44455	400985	400985	SJ	SJ	400987	400987	S0	S0	400985	400985	SJ	SJ	400987	400987	S0	S0	9793157	NB	9789091	NI	3492814	SP	3492845	MM	3173413	3686566	JG	SW
44445	400985	400985	SJ	SJ	400987	400987	S0	S0	400985	400985	SJ	SJ	400987	400987	S0	S0	9793158	NJ	9793159	NB	3492814	SP	3492845	MM	3173413	3686566	JG	SW
44455	400985	400985	SJ	SJ	400987	400987	S0	S0	400985	400985	SJ	SJ	400987	400987	S0	S0	9793157	NB	9789091	NI	3492814	SP	3492845	MM	3173413	3686566	JG	SW
44445	400985	400985	SJ	SJ	400987	400987	S0	S0	400985	400985	SJ	SJ	400987	400987	S0	S0	9793158	NJ	9793159	NB	3492814	SP	3492845	MM	3173413	3686566	JG	SW

(P)

(P)

◐ L-6 ENGINE (STD)

◒ V-8 ENGINE (OPTIONAL)

◒ SPORTWAGON WITH 350 CU. IN. ENGINE

● SPORTWAGON WITH 400 CU. IN. ENGINE

87

1385742

DOCUMENTATION REQUIRED

DATE	SYM	REVISION RECORD	APPR.
5-15-67	A	X - REMOVED	
7-31-67	B	3174813 TO 3174813, 2 PLACES	71584
7-31-67	C	3174813 to 3174813	71584
8-4-67	D	3174813 to 3174813	
8-17-67	E	400881 SM to 400881 SE	
9-26-67	F	3174567 SK to 3174813 JG (2 Places)	71584
10-4-67	G	Series Count Reduced	71584
12-12-67	H	NOT APPLICABLE (Service)	
1-18-68	J	1968 MODEL	
1-18-68	K	3193134 to 3193001 LH; 3193135 to 3193002 RH (Placed VIN 138 to VIN 139)	
1-18-68	L	3174567 SK to 3174813 JG (4-Places) MM to MB LH (Placed VIN 138 to VIN 139)	71584
2-5-68	M	3193134 MM to 3193001 MB LH; 3193135 MM to 3193002 MB RH (2 Places) 3193001 MB to 3193001 MM LH; 3193002 MB to 3193002 MM RH (2-Places)	71584
3-14-68	N	3192543 PK to 3192543 TS; 3193150 NB to 3193150 NJ (2-Places)	71584
4-17-68	P	3174567 SK to 3174813 SJ 4-Places	71584

REAR SPRINGS - TAPE COLOR - ORANGE

USE HIGH-RANGE SPRINGS ON RIGHT SIDE & LOW-RANGE SPRINGS ON LEFT SIDE.

IF NECESSARY, USE TWO HIGH-RANGE OR TWO LOW-RANGE SPRINGS.

LOW-RANGE SPRINGS ARE IDENTIFIED BY A BLACK BAR ON TAPE UNDER IDENTIFICATION LETTERS.

FRONT SPRINGS - TAPE COLOR - GREEN

USE FRONT SPRINGS AS SPECIFIED BY PART NUMBER. USE EITHER BOTH HIGH RANGE OR BOTH LOW RANGE ON LEFT & RIGHT.

DO NOT SCALE — REPORT ERRORS

TOLERANCES UNLESS OTHERWISE SPECIFIED
± — ALLOWED ON TWO PLACE DECIMALS
± .010 ALLOWED ON THREE PLACE DECIMALS

COMMERCIAL TOLERANCES APPLY TO STANDARD PARTS - ROLLED SECTIONS - SHEET METAL GAGES - DRILLED AND PUNCHED HOLES.

REAM ALL DRILLED HOLES. COUNTERSINK ALL TAPPED HOLES 030 X 60°.

DWG DATE	SCALE	DR. CHAS MANOS
5-16-67	—	CK. J. [illegible]
FIRST USED		APPR.
1968 - A		APPR.
REFERENCE		APPR.

REGULAR

NAME: CHART - SHOCK ABSORBER & COIL SPRING DATA

PART NO. 1385742 | PAGE NO. 3-4.1

V2 P = 517

DAVE GRAHAM INC. - 2015
ALL RIGHTS RESERVED

DAVE GRAHAM INC. - 2015
ALL RIGHTS RESERVED

1365743

SERIES	FRONT CHASSIS SPRINGS								REAR CHASSIS SPRINGS				FRONT SHOCK ABSORBERS		REAR SHOCK ABSORBERS	
	LESS AIR CONDITIONING				WITH AIR CONDITIONING				REG. HEAVY DUTY		TRAILER & OVERLOAD					
	PART NO'S		TAPE IDENT LETTERS		PART NO'S		TAPE IDENT LETTERS		PART NOS.	TAPE IDENT LETTERS	PART NOS	TAPE IDENT LETTERS	PART NOS	IDENT CODE	PART NOS	IDENT CODE
	LEFT SIDE	RIGHT SIDE	LEFT SIDE	RIGHT SIDE	LEFT SIDE	RIGHT SIDE	LEFT SIDE	RIGHT SIDE								
4327	401752	401753	LJ	LS	401753	400993	LS	SS	9793156	MS	9787049	PQ	397240	SS	397283	SN
4339	401752	401753	LJ	LS	401753	400993	LS	SS	9793156	MS	9787049	PQ	397240	SS	397283	SN
4337	400882	401753	LJ	LS	401753	400993	LS	SS	9793156	MS	9787049	PQ	397240	SS	397283	SN
4349	401752	401753	LJ	LS	401753	400993	LS	SS	9793156	MS	9787049	PQ	397240	SS	397283	SN
4327	401754	400993	LS	SS	401177	400996	SW	RQ	9793156	MS	9787049	PQ	397240	SS	397283	SN
4339	401754	400993	LS	SS	401177	400996	SW	RQ	9793156	MS	9787049	PQ	397240	SS	397283	SN
4337	401754	400993	LS	SS	401177	400996	SW	RQ	9793156	MS	9787049	PQ	397240	SS	397283	SN
4349	401754	400993	LS	SS	401177	400996	SW	RQ	9793156	MS	9787049	PQ	397240	SS	397283	SN
4349	401177	401177	SW	SW	400997	400997	RE	RE	9793772	MR	9793772	MR	397240	SS	397283	SN
43437	401179	401180	BA	BC	401180	401181	BC	BF	9793888	PS			397240	SU	397289	SV
44437	401754	400993	LS	SS	401177	400996	SW	RQ	9793156	MS	9787049	PQ	397240	SS	397283	SN
44467	401754	400993	LS	SS	401177	400996	SW	RQ	9793156	MS	9787049	PQ	397240	SS	397283	SN
44439	400993	401177	SS	SW	400996	400997	SY	RE	9793156	MS	9787049	PQ	397240	SS	397283	SN
44469	401754	400993	LS	SS	401177	400996	SW	RQ	9793156	MS	9787049	PQ	397240	SS	397283	SN
4837	401180	402063	BC	S2	402064	401182	S3	M	9793824	PR	9793772	MR	397240	SU	397289	SV
4867	401180	402063	BC	S2	402064	401182	S3	R1	9793824	PR	9793772	MR	397240	SU	397289	SV
4855											9797048	PJ				
4865											9797048	PJ				
4855											9797048	PJ				
4865											9797048	PJ				
4855											9797048	PJ				
4865											9797048	PJ				
4855											9797048	PJ				
4865											9797048	PJ				

(F) 6 ENGINE (STD)

(G) 8 ENGINE (OPTIONAL)

(K) STATION WAGON WITH 350 CU. IN. ENGINE

(L) STATION WAGON WITH 400 CU. IN. ENGINE

DATE	BY	REVISED			
2-2-68	B1	P1 to 9793722			
		P2 to 9793644			
	2	P3 to 9793721			
	3	P3 to 9793721	721299	PP	AT
10-6-67	C	Series Chart Revised	720868	PP	AT
10-23-67	D	P8 Code Added			PP
12-8-67	E	P9 to P9 (G P1 to 9793722			PP
1-15-68	F	9797048 (K L to 9793722			
		9797084 (K L to 9793722	720868	PP	AT
2-14-68	G	9797048 (K L to 9793156			
		(L) P1 to AT	720868	PP	AT
2-20-68	H	NOTE ADDED		PP	PP

REAR SPRINGS - TAPE COLOR - ORANGE

USE HIGH RANGE SPRINGS ON RIGHT SIDE & LOW RANGE SPRINGS ON LEFT SIDE.

IF NECESSARY USE TWO HIGH RANGE OR TWO LOW RANGE SPRINGS

LOW RANGE SPRINGS ARE IDENTIFIED BY A BLACK BAR ON TAPE UNDER IDENTIFICATION LETTERS

FRONT SPRINGS - TAPE COLOR - GREEN

USE FRONT SPRINGS AS SPECIFIED BY PART NUMBER. USE EITHER BOTH HIGH RANGE OR BOTH LOW RANGE ON LEFT & RIGHT.

DO NOT SCALE — REPORT ERRORS

TOLERANCES UNLESS OTHERWISE SPECIFIED
- .X ± .1 (ONE OR TWO PLACE DECIMALS)
- .XX ± .02 (TWO PLACE DECIMALS)
- .XXX ± .005 (THREE PLACE DECIMALS)

COMMERCIAL TOLERANCES APPLY TO STAMPED PARTS, ROLLED SECTIONS, SHEET METAL GAGES, MACHINED AND FINISHED FACES.

BREAK ALL SHARP EDGES, COUNTERSINK ALL TAPPED HOLES EXCEPT

DRAWN	DATE	SCALE	CHECKED
	5-1-67		
ISSUE CODE	1962 A		APPR
REFERENCE			APPR
			APPR

PART NO.

(M) DOCUMENTATION REQUIRED

1968 AXLE RATIOS

6-5-67

SERIES	ENGINE	TRANS	STD	ECONOMY G 95	ECONOMY G 96 PT	PERFORMANCE G 91 PT	PERFORMANCE G 92	SPECIAL CAR ORDER G90*	SPECIAL CAR ORDER G 89*
SPECIAL DELUXE & SKYLARK COUPES, SEDANS & CONVERTIBLES	250 L6	3 SPEED MAN	3.23C	NA	NA	NA	NA	3.91**	NA
		2 SPEED AUTO	2.93C	2.73	2.73	3.23C	NA	3.91**	3.42**
		2 SPEED AUTO W/AC	3.23C	NA	NA	3.42C**	NA	NA	NA
	350 V8	3 SPEED MAN	2.93C	NA	NA	NA	NA	3.91**	3.42**
		2 SPEED AUTO 2 BBL	2.56	NA	NA	3.23C	3.23C	3.91**	NA
		2 SPEED AUTO 4 BBL	2.73	NA	NA	3.23C	3.23C	3.91**	NA
GS 350	350 V8	☛ 3,4 SPEED MAN	3.23	NA	NA	NA	NA	NA	NA
		2 SPEED AUTO	3.23	NA	NA	NA	NA	NA	NA
SPECIAL WAGON	350 V8	3 SPEED MAN	3.23	NA	NA	NA	NA	3.91**	NA
		2 SPEED AUTO	2.93	2.73	2.73	3.23	NA	3.91**	NA
SPORTWAGON	350 V8	3 SPEED MAN	3.23	NA	NA	NA	NA	3.91	NA
		2 SPEED AUTO	3.23	2.93	2.93	3.42	NA	3.91	3.64
SPORTWAGON 400	400 V8	3 SPEED AUTO	3.23	2.93	2.93	3.42	NA	3.91	3.64
GS 400	400 V8	3,4 SPEED MAN	3.42	NA	NA	3.64	NA	3.91	NA
		3 SPEED AUTO	2.93	NA	NA	3.42	NA	3.91	3.64
LESABRE	350 V8	3 SPEED MAN	3.23	NA	NA	NA	NA	3.91	NA
		2 SPEED AUTO	2.93	2.73*	2.73*	3.23	NA	3.91	3.42
		3 SPEED AUTO	2.93	2.73*	2.73*	3.23	NA	3.91	3.42
WILDCAT ELECTRA	430 V8	3 SPEED MAN/AUTO	3.07	2.78	2.78	3.42	NA	3.91	NA
		3 SPEED AUTO	2.78	2.56	2.56	3.42	NA	3.91	NA
RIVIERA GS RIVIERA	430 V8	3 SPEED AUTO	3.07	NA	NA	3.42	NA	3.91	NA
		3 SPEED AUTO	3.42PT	NA	NA	NA	NA	3.91	NA
			12 REG 13 PT	3 REG	3 PT	3 PT		7 SCO	
			25	3	3	3		7	

PT = POSITIVE TRACTION

NOTE: SPECIAL CAR ORDER AVAIL ONLY WITH PT

NA = NOT AVAILABLE

* NOT AVAILABLE WITH A/C

** SAME AXLE AS GS 400

34 PLUS 7 SCO = 41 TOTAL AXLE ASSEMBLIES

1968 LOWER SERIES RATIOS AVAILABLE 2.56, 2.73, 2.93, 3.23, 3.42, 3.64 & 3.91

1968 UPPER SERIES RATIOS AVAILABLE 2.56, 2.78, 3.07, 3.23, 3.42 & 3.91

C = CANADIAN USAGE 3.23 TO 3.31, 2.93 TO 3.07 & 3.42 NA

☛ REVISIONS

L.W. MICK
PRODUCT PROGRAM
EXT. 65808

DAVE GRAHAM INC. - 2015
ALL RIGHTS RESERVED

1968-A REAR CONTROL ARM USAGE

Upper

Arm Bush. Asm. (a) Part No.	Code	Arm & Reinf. Assembly	Arm	Bushing	Reinf.	P	B	O	C
9790152	NC	None	9790825 (c)	9780946	None	P			
9790823	AF NN	None	9790825 (c)	1383925	None		B		
9790824	AG NO	None	9790825 (c)	1368451	None		B	O	
9790778	JH NS	None	9790825 (c)	388266	None			O	
9790978	EF NU	None	9790825 (c)	3869855	None				C
9790979	EG NV	9790980	9790981 (d)	3869855	9790982				C
9791654	AH NP	9790980	9790981 (d)	1383925	9790982		B*		
9791655	AK NR	9790980	9790981 (d)	1368451	9790982		B*	O*	
9792783	JK NT	9790980	9790981 (d)	388266	9790982			O*	

(a) All arm and bushing assemblies shown on 9790779 - Chart
(b) Buick trim - carrier end
(d) Chevrolet trim - carrier end

Lower

9793174	NB	None	9790376 (e)	9793175	None	P			
9790375	ND	None	9790376 (e)	1370101	None	P			
9790780	AE NW	None	9790782 (f)	1370101	None		B	O	
~~9792243~~	~~AN~~	~~None~~	~~9790782 (f)~~	~~1385005~~	~~None~~		~~B~~		
9791102	JF NZ	9791104	9790782 (f)	9780946	387887			O	
9791103	None	None	9791105 (g)	3869857	None				C
9791773	AL NX	9791104	9790782 (f)	1370101	387887		B		
9791811	AM NY	None	9790782 (f)	1383925	None		B		

(e) Single extrusions - no rear stabilizer holes
(f) Double parallel extrusions - with rear stabilizer holes
(g) Double opposite extrusions - no rear stabilizer holes

*For Canadian built cars, using Chevrolet H.D. axle

39-924

LBS/js
5-5-67

DAVE GRAHAM INC. - 2015
ALL RIGHTS RESERVED

	PAGES
Control Arms - Identification	4-1.1
Axle Information Assembly & Lubricant Requirements	4-2.1
Rear Wheel Suspension Installations Control Arms - Spring Insulator - Shock Absorber & Compression Bumpers	4-3.1
Rally-Pac Firm Ride Information Assembly GS 350 & GS 400	4-3.2
Automatic Level Control Rear Shocks (Sportwagon) Tube Routing Compressor Asm - Vacuum Supply Hose - Clamps & Tee Installations (2 pages)	4-4.1 4-4.2
Propeller Shaft Installation & Information - Identification	4-5.1
Rear Axle Assembly Markings - Series - Ratio - Field & Assembly Plant Identification.	4-8.1
Canadian Usage	4-8.2

Revised 8-1-67

PART NUMBER- 1383770

PAGE NUMBER- 4-1.0

DAVE GRAHAM INC. - 2015
ALL RIGHTS RESERVED

REAR UPPER AND LOWER CONTROL ARM ASSEMBLY IDENTIFICATION

Control Arm Assemblies are identified by a yellow stamp identification. .75" high letters on top face of the arm.

UPPER ARM ASSEMBLIES

PART NO.	BUSHING PART NO.	IDENTIFICATION	USAGE
9790824 —	1368451	NO	Auto Trans. Less H.D., & Less Wagons & Less G.S. 400 & 350
9790823 —	1383925	NN	A Series Regular - 100, 350 & 400 G S - All Wagons

LOWER ARM ASSEMBLIES

9720151

9790780	1370101	NW	Sportwagon, 350 & 400 G.S. & Heavy Duty
9791811	1383925	NY	All-Less Sportwagon, 350 & 400 G.S., & Heavy Duty

DAVE GRAHAM INC. - 2015
ALL RIGHTS RESERVED

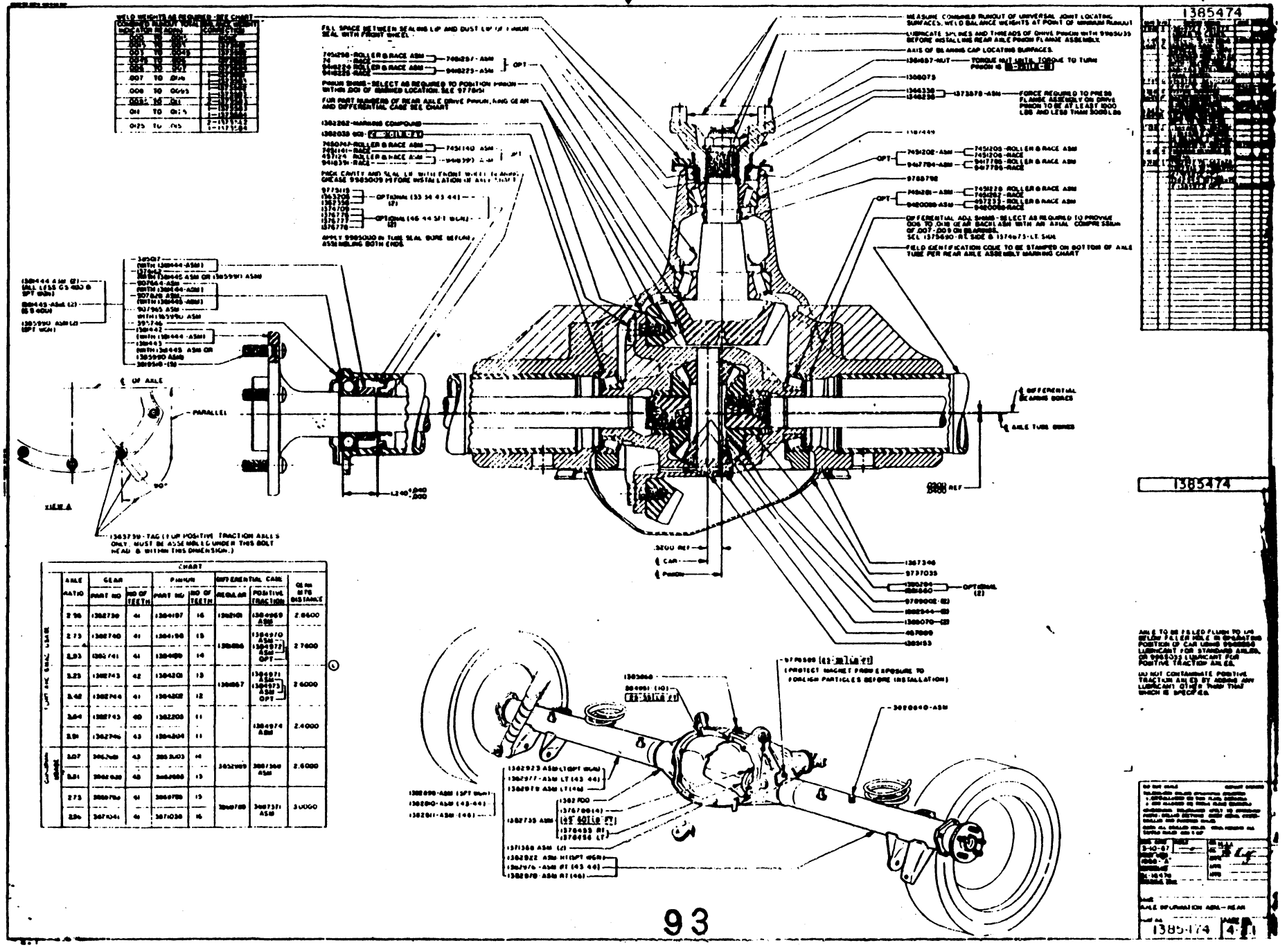

DAVE GRAHAM INC. - 2015
ALL RIGHTS RESERVED

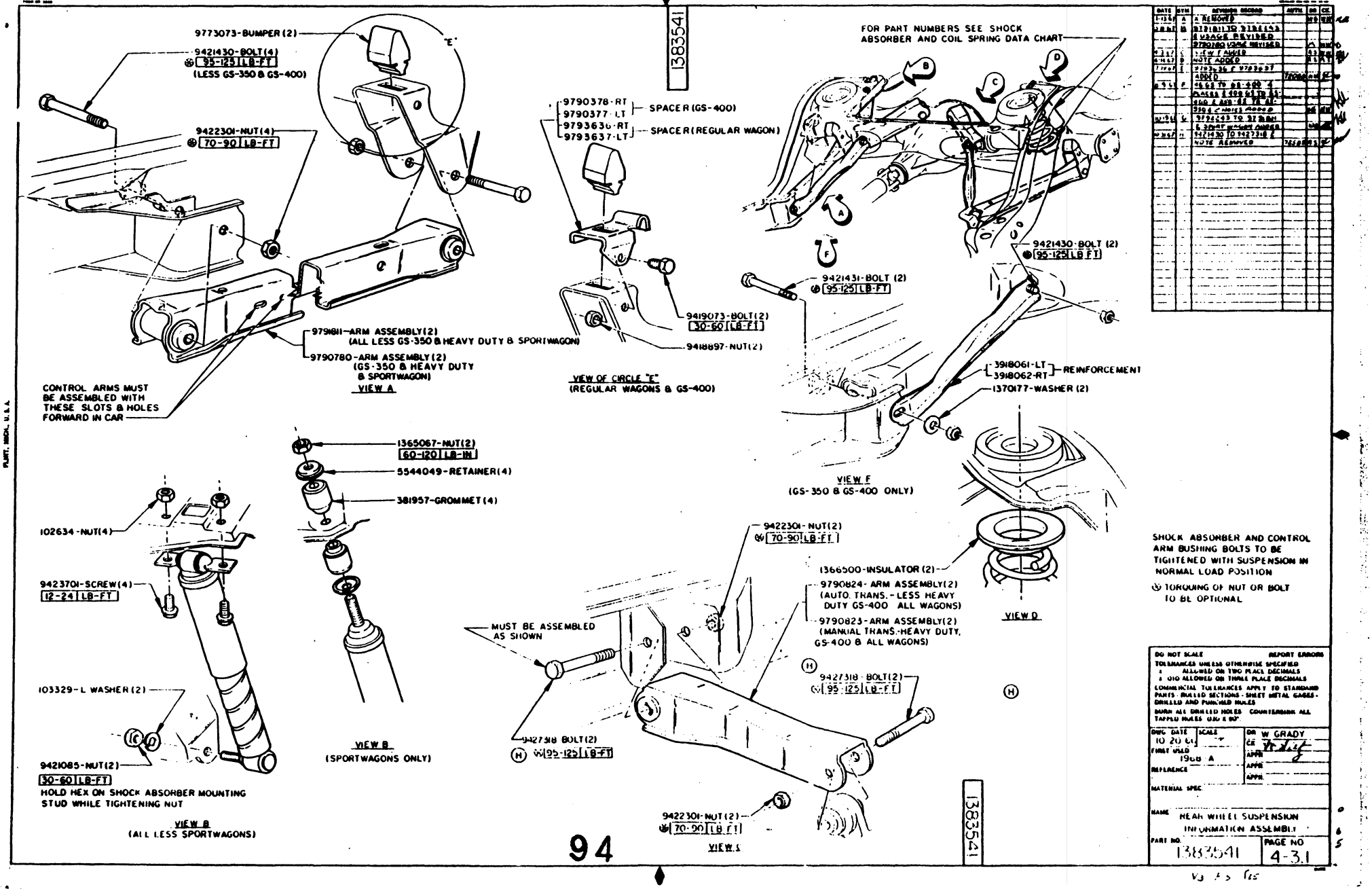

DAVE GRAHAM INC. - 2015
ALL RIGHTS RESERVED

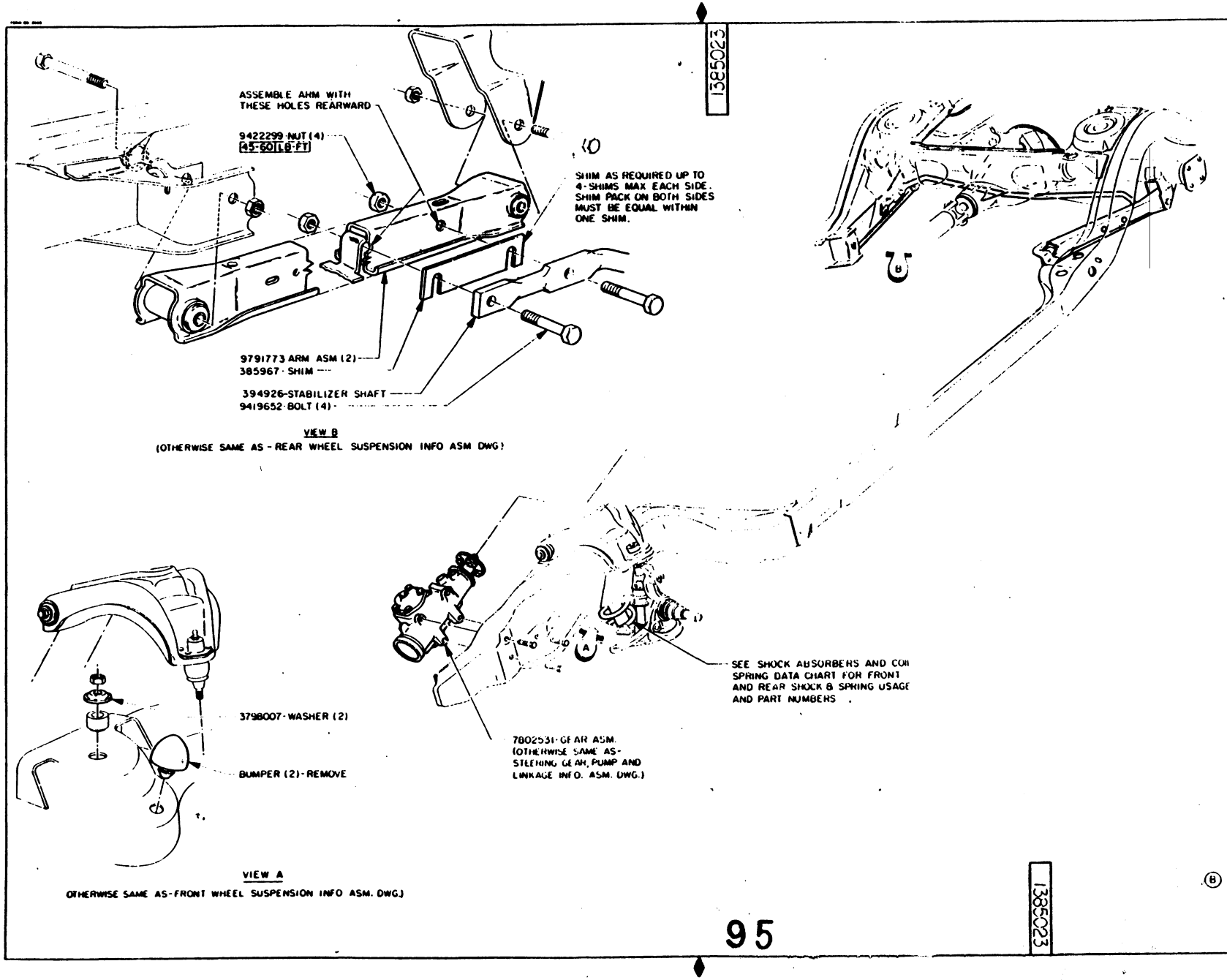

DATE	SYM	REVISION RECORD	AUTH	DR	CK
[illegible]	A	X - REMOVED		[illegible]	[illegible]
[illegible]	B	[illegible] ADDED		[illegible]	[illegible]

DO NOT SCALE — REPORT ERRORS

TOLERANCES UNLESS OTHERWISE SPECIFIED
± ALLOWED ON TWO PLACE DECIMALS
± .010 ALLOWED ON THREE PLACE DECIMALS
COMMERCIAL TOLERANCES APPLY TO STANDARD PARTS - ROLLED SECTIONS - SHEET METAL GAGES - DRILLED AND PUNCHED HOLES
DURR ALL DRILLED HOLES. COUNTERSINK ALL TAPPED HOLES .030 X 90°.

DWG. DATE	SCALE	DR. H. ANDERSON
2 23 67	—	CK. [illegible]
FIRST USED 1968 A GS		APPR.
REFERENCE		APPR.
		APPR.

GS 350 & GS 400

NAME RALLY PAC FIRM RIDE INFORMATION ASSEMBLY

PART NO. 1385023 — PAGE NO. 4-3.2

95

DAVE GRAHAM INC. - 2015
ALL RIGHTS RESERVED

DAVE GRAHAM INC. - 2015
ALL RIGHTS RESERVED

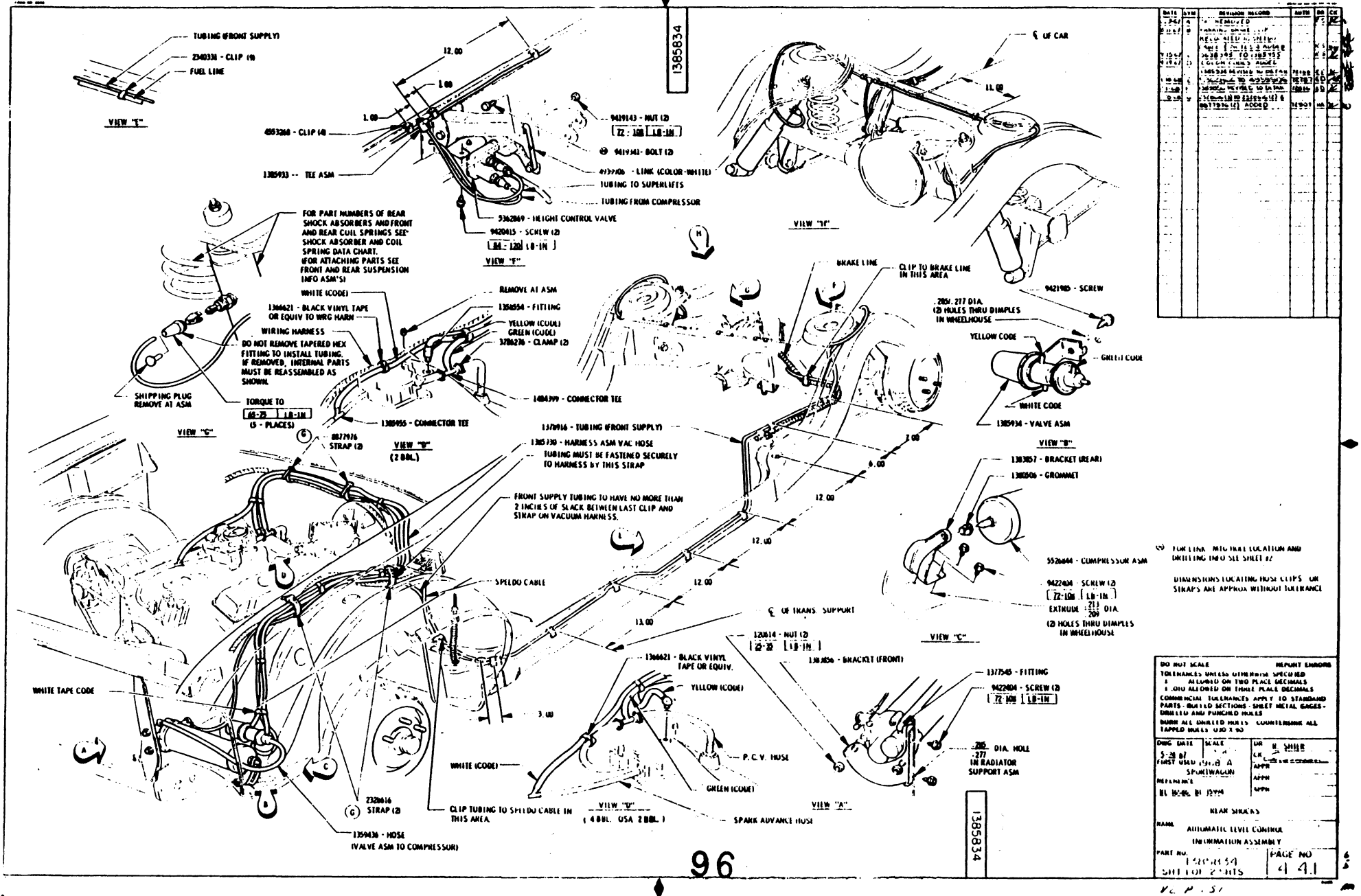

BUICK MOTOR DIVISION
GENERAL MOTORS CORPORATION
FLINT, MICH., U. S. A.

1385834

DATE	SYM.	REVISION RECORD	AUTH.	DR.	CK.
10-10-67	B	REDRAWN & REVISED		R.S.	

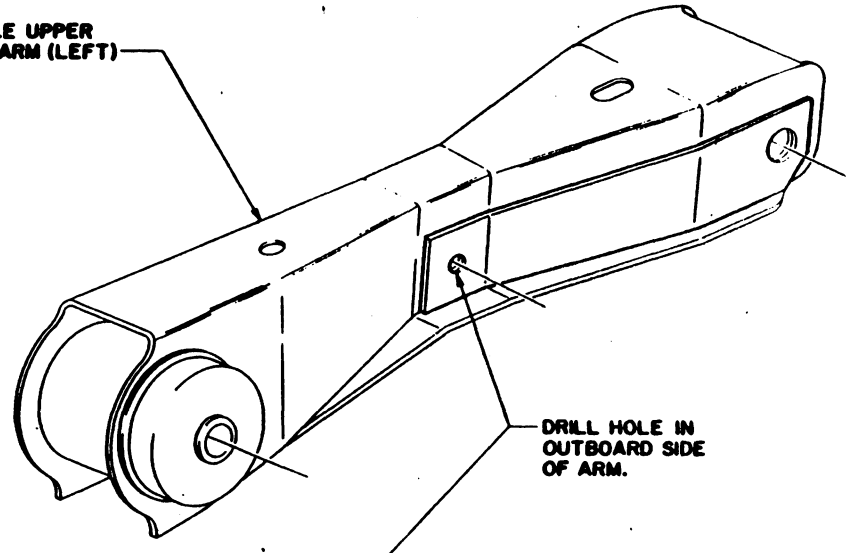

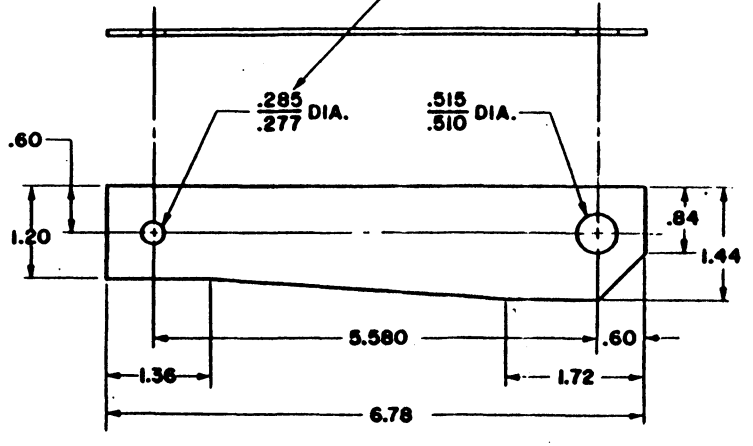

TEMPLATE

97

DO NOT SCALE REPORT ERRORS
TOLERANCES UNLESS OTHERWISE SPECIFIED
± .02 ALLOWED ON TWO PLACE DECIMALS
± .010 ALLOWED ON THREE PLACE DECIMALS
COMMERCIAL TOLERANCES APPLY TO STANDARD PARTS - ROLLED SECTIONS - SHEET METAL GAGES - DRILLED AND PUNCHED HOLES.
BURR ALL DRILLED HOLES. COUNTERSINK ALL TAPPED HOLES .030 X 90°.

DWG. DATE 5-24-67	SCALE —H—	DR. R. SHIER
		CK.
FIRST USED 1968-A SPORTWAGON		APPR.
		APPR.
REFERENCE		APPR.

REAR SHOCKS

NAME AUTOMATIC LEVEL CONTROL INFORMATION ASSEMBLY

PART NO. 1385834 SHT 2 OF 2 SHTS

PAGE NO. 4-4.2

1385834

P5 57

DAVE GRAHAM INC. - 2015
ALL RIGHTS RESERVED

DAVE GRAHAM INC. - 2015
ALL RIGHTS RESERVED

1383490

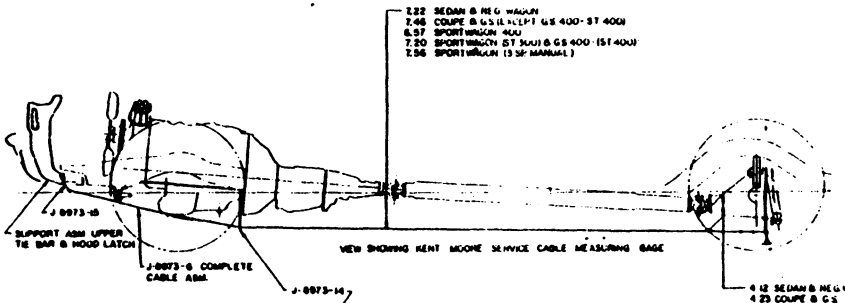

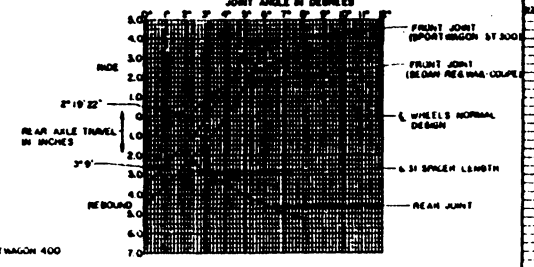

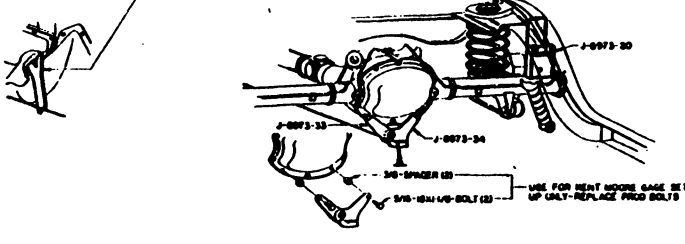

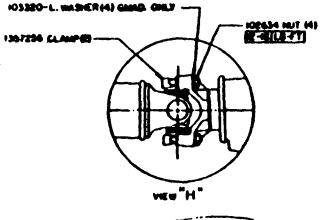

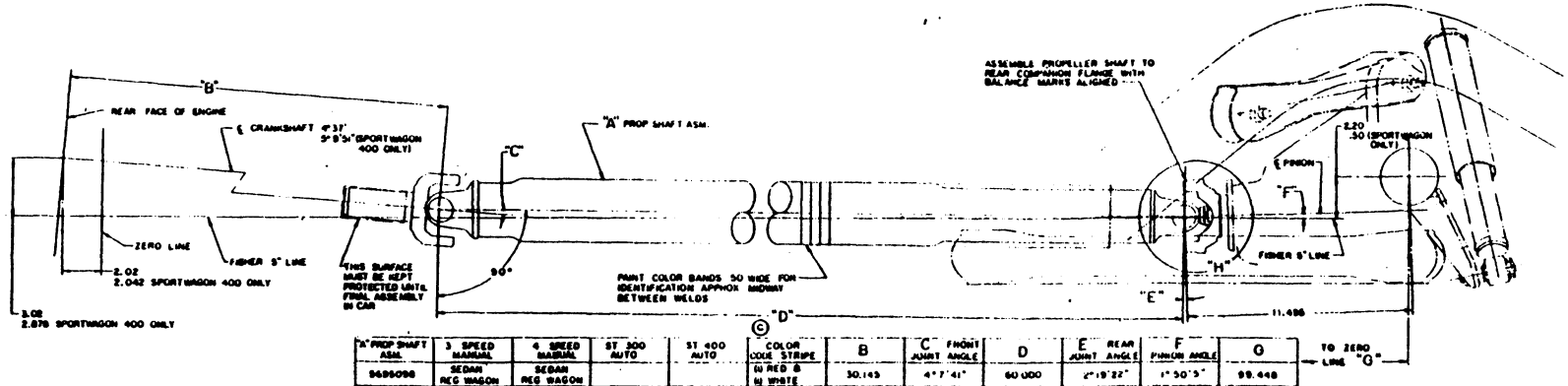

"A" PROP SHAFT ASM.	3 SPEED MANUAL	4 SPEED MANUAL	ST 300 AUTO	ST 400 AUTO
5696098	SEDAN REG WAGON	SEDAN REG WAGON		
7801890	COUPE & GS 350	COUPE GS 400		
7801892	GS 400 & COUPE HD TRAN			
5695094	SPT WAGON			
7800855			SEDAN REG WAGON	
7801891			COUPE & GS 350	
5697057			SPT WAGON	
7801896				GS 400
7801246				SPT WAGON
5695505	SEDAN & REG WGN HD TRAN			

© COLOR CODE STRIPE	B	C FRONT JOINT ANGLE	D	E REAR JOINT ANGLE	F PINION ANGLE	G
(i) RED & (ii) WHITE	30.145	4°7'41"	60.000	2°19'22"	1°50'5"	99.448
(i) BLACK & (ii) PURPLE	30.145	4°5 35"	56.000	2°21'27"	1°50'5"	99.448
(i) BROWN & (ii) GREEN	30.145	4°5 35"	56.000	2°21'27"	1°50'5"	99.448
(i) RED & (ii) BLACK	30.180	2°49'9"	60.000	2°47'44"	1°36'37"	104.535
(i) RED & (ii) WHITE	30.145	4°7'41"	60.000	2°19'22"	1°50'5"	99.448
(i) YELLOW & (ii) BROWN	30.145	4°5 35"	56.000	2°21'27"	1°50'5"	99.448
(i) BLACK & (ii) YELLOW	30.384	3°6'55"	56.000	2°29'55"	1°36'37"	104.535
(i) YELLOW & (ii) [illegible]	31.050	4°9'39"	53.100	2°17'23"	1°50'5"	99.448
(i) WHITE & (ii) PINK	30.711	4°9'44"	58.300	2°19'26"	1°36'37"	104.535
(i) RED & (ii) YELLOW	30.145	4°7'41"	60.000	2°19'22"	1°50'5"	99.448

MAINTAIN SPECIFIED REAR JOINT ANGLE WITHIN ± 0°30' FOR 75% OF JOBS AND WITHIN ± 0°48' FOR 100% OF JOBS.

NUTS ON U BOLTS AT REAR AXLE PINION FLANGE MUST BE DRAWN DOWN EVENLY.

DO NOT USE U BOLTS TO PULL BEARINGS INTO PLACE. BEARINGS MUST BE STARTED STRAIGHT & SEATED IN AXLE PINION FLANGE WITHOUT UNDUE FORCE.

MARK ALL PROPELLER SHAFT WITH CHALK TO PREVENT LEFTS OR OTHER DAMAGE TO THE TUBE.

SHAFT IS PRECISION STRAIGHTENED & BALANCED PART

1383490

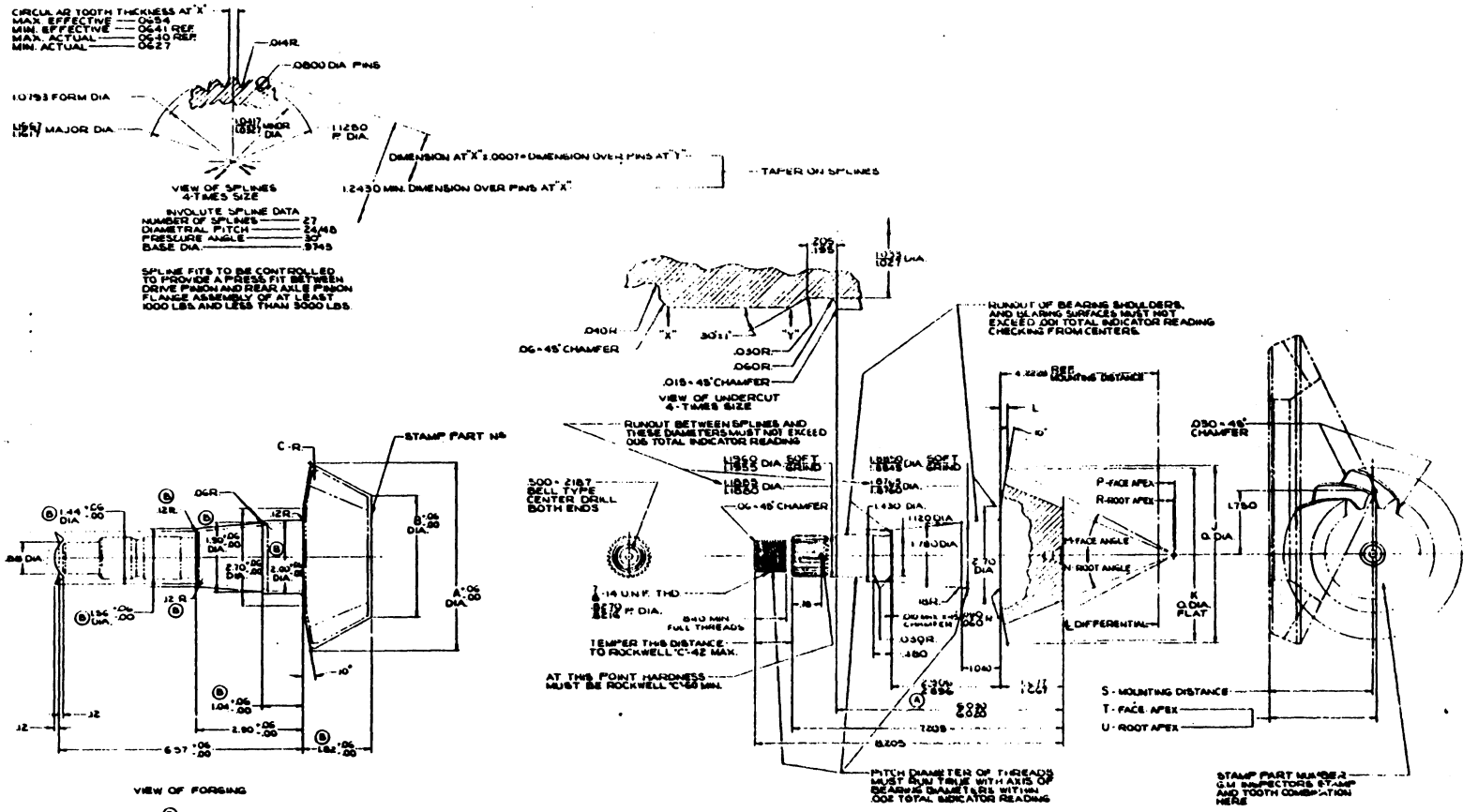

FORGING DATA

FORGING PART NO.	A DIA. IN I.P.	B DIA.	C RAD.	FINISH BLANK PART NO.
1384197	3.60	3.89	.09	1384196 1384197
1384198	3.38	3.54	.12	1384198 1384199
1384199	3.10	3.34	.12	1384200
1384201	4.72	3.09	.12	1384201 1384202
1384202	4.59	3.05	.12	1384203 1384204

FINISHED PINION AND TOOTH DATA

PART NO.	RATIO	NO. OF TEETH	NO. OF TEETH IN MATING PART	PART NO. OF MATE	J O. DIA. REF.	K O. DIA. FLAT	L REF.	M FACE ANGLE	N ROOT ANGLE	P FACE APEX	R ROOT APEX	S MOUNTING DISTANCE	T REF.	U REF.	SPIRAL ANGLE L.H.	BACKLASH AFTER LAPPING	INCLUDED PRESSURE ANGLE AVG.	GEAR DIM. SHEET NUMBER
1384195	2.26	19	43	1382737	1.2494	L.411/5.407	2.5778	31°53'	24°30'	2.594	1.863	2.8640	2.8640	1.863	45°30'	.005-.007	30°	350 4878
1384196	2.41	17	41	1382738	1.2494	1.336/1.330	2.3771	30°37'	23°14'	2.468	1.581	2.7040	2.7040	1.763	43°52'	.004-.008	30°	350 1548 B
1384197	2.56	16	41	1382739	1.2494	1.265/1.259	2.2301	29°44'	22°18'	2.351	1.492	2.5840	2.5840	1.700	42°56'	.004-.008	30°	350 1456 C
1384198	2.73	15	41	1382740	1.2494	1.204/1.198	2.1140	30°29'	23°00'	2.468	1.581	2.7040	2.7040	1.763	43°52'	.004-.008	30°	350 1228 C
1384199	2.93	14	41	1382741	1.2494	1.139/1.133	1.9931	28°41'	21°58'	2.351	1.492	2.5840	2.5840	1.700	42°56'	.004-.008	30°	350 1228 C
1384200	3.08	13	40	1382742	1.2478	1.061/1.055	1.867	27°55'	21°16'	2.351	1.492	2.5840	2.5840	1.700	42°56'	.004-.008	30°	350 1228 C
1384201	3.23	12	40	1382743	1.2478	1.000/.994	1.7609	26°55'	20°16'	2.351	1.492	2.5840	2.5840	1.700	42°56'	.004-.008	30°	350 1228 C
1384202	3.42	11	41	1382744	1.2478	.939/.933	1.6538	25°54'	19°13'	2.351	1.492	2.5840	2.5840	1.700	42°56'	.004-.008	30°	350 1228 C
1384203	3.64	11	40	1382745	1.2478	.904/.898	1.5938	25°14'	18°34'	2.351	1.492	2.5840	2.5840	1.700	42°56'	.004-.008	30°	350 1228 C
1384204	3.91	10	41	1382746	1.2478	.848/.842	1.4938	24°16'	17°36'	2.351	1.492	2.5840	2.5840	1.700	42°56'	.004-.008	30°	350 1228 C
1384205	4.23	9	41	1382747	1.2478	.793/.787	1.3938	23°16'	16°36'	2.351	1.492	2.5840	2.5840	1.700	42°56'	.004-.008	30°	350 1228 C
1384206	4.64	8	41	1382748	1.2478	.737/.731	1.2938	22°16'	15°36'	2.351	1.492	2.5840	2.5840	1.700	42°56'	.004-.008	30°	350 1228 C

BUICK MOTOR DIVISION
DAVE GRAHAM INC. - 2015
ALL RIGHTS RESERVED

1385209

AXLE ASM RATIO USAGES

SERIES	ENGINE	TRANSMISSION	STANDARD RATIO	STANDARD REGULAR	STANDARD CODE	STANDARD POSITIVE TRACTION	STANDARD CODE	ECONOMY RATIO	ECONOMY REGULAR	ECONOMY CODE	ECONOMY POSITIVE TRACTION	ECONOMY CODE	PERFORMANCE RATIO	PERFORMANCE REGULAR	PERFORMANCE CODE	PERFORMANCE POSITIVE TRACTION	PERFORMANCE CODE	SPECIAL CAR ORDER - POSITIVE TRACTION RATIO	SPECIAL CAR ORDER - POSITIVE TRACTION NO. "1"	SPECIAL CAR ORDER - POSITIVE TRACTION CODE	SPECIAL CAR ORDER - POSITIVE TRACTION RATIO	SPECIAL CAR ORDER - POSITIVE TRACTION NO. "2"	SPECIAL CAR ORDER - POSITIVE TRACTION CODE
[illegible]	250 L-6	3-SPEED MANUAL																3.91 ●	1385886	OZ	3.42	1385884	OO
[illegible]		2-SPEED AUTO (A/C)	3.23	1385866	LC	1385879	LP						3.42	1385868	OH	1385864	OO						
[illegible]		2-SPEED AUTO	2.93	1385865	LB	1385878	LW						3.23	1385866	LC	1385879	LP	3.91 ●	1385888	OZ	3.42	1385884	OO
[illegible]	300 V-8	3-SPEED MANUAL	2.93	1385888	LB	1385878	LW														3.23	1385379	LP
		2-SPD. AUTO / 2 BBL	2.56	1385863	LK	1385898	LT														2.73	1385377	LC
		2-SPD. AUTO / 2 BBL (A/C)	2.73	1385864	LL	1385877	LQ						3.23	1385886	LC	1385879	LP	3.91 ●	1385886	OZ			
		2-SPD. AUTO/4 BBL						2.56	1385863	LK	1385898	LT											
43687		3 & 4 SPD. MANUAL	3.23	1385866	LC	1385879	LP						3.42	1385869	OH	1385864	OO				3.64	1385885	ON
		2-SPD. AUTO																					
43439		3-SPEED MANUAL	3.23	1385866	LC	1385879	LP														3.64	1385885	ON
		2-SPEED AUTO	2.93	1385865	LB	1385878	LW	2.73	1385864	LL	1385877	LQ	3.23	1385886	LC	1385879	LP	3.91 ●	1385881	OZ			
[illegible]	400 V-8	3-SPEED MANUAL	3.23	1385867	MG	1385880	MT	2.93	1385944	MA	1385945	MX									3.64	1385946	MY
[illegible]		2-SPEED AUTO											3.42	1387163	MK	1385881	MO	3.91 ●	1385882	MZ			
[illegible]		3-SPEED MANUAL	3.42	1385869	OH	1385884	OO																
		4-SPEED MANUAL											3.64			1385885	ON	3.91 ●	1385886	OZ			
		3-SPEED AUTO	2.93	1385868	OE	1385883	ON						3.42	1385869	OH	1385884	OO				3.64	1385885	ON
[illegible]	350 V-8	3-SPEED MANUAL	3.23	1385872	MB	1385888	ME														3.42	1385898	MN
[illegible]		2-SPEED AUTO																3.64	1387174	MY			
[illegible]		3-SPEED AUTO	2.93	1385871	MJ	1385887	MK	2.73 ●	1385838	MK	1385847	MO	3.23	1385872	MB	1385888	ME						
[illegible]	430 V-8	3-SPEED MANUAL																					
[illegible]		3-SPEED AUTO	3.08	1385873	PS	1385894	PV	2.28	1385874	PL	1385893	PO	3.42			1385895	PW						
[illegible]													3.23	1387164	PH								
[illegible]		3-SPEED AUTO	2.56	1385834	PL	1385883	PO	2.56	1385873	PS	1385892	PW						3.91 ●	1385898	PX	3.07	1385894	PV
[illegible]													3.23	1387164	PH	1387165	PK						
[illegible]		3-SPEED AUTO	3.07	1385838	PJ	1385887	PW						3.42			1385898	PY	3.91 ●	1385899	PZ			
[illegible]													3.23	1387166	PK								
[illegible] - G. S.			3.42			1385898	PY																

DATE	SYM	ACTION & ECO NO.	APPVD	DR	CK
4-26-67	A	2.73 RATIO ADDED TO 350 PWR'D 2 SPD AUTO PER ECO 64-437-29	4-26-67	PP	[illegible]
5-16-67	B	2 SPD AUTO / 2 BBL A/C ADDED TO SERIES 43687-39 31-27-68	12-20	PP	[illegible]
8-28-67	C	2.56 Axle Added	12-20	PP	[illegible]
9-8-67	D	3.42 Axle Added	12-20	PP	[illegible]
9-27-67	E	SPECIAL CAR ORDER 3.91 RATIO LIMITED	12-20	PP	[illegible]

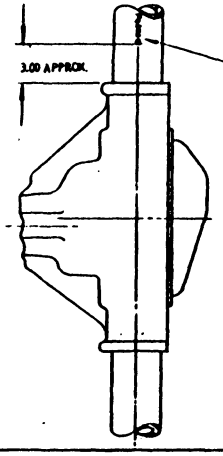

FOR FIELD IDENTIFICATION, ALL AXLE ASSEMBLIES TO BE STAMPED WITH LETTERS 3/16 HIGH ON BOTTOM OF AXLE TUBE AS INDICATED FROM CHART. SAMPLE MARKING FOR 3.07 RATIO, DATE MAY 22, 1DAY IN THE YEAR MFG'D WOULD BE STANDARD AXLES PG. 283, POSITIVE TRACTION AXLES @ PV 283.

ASSEMBLY PLANE IDENTIFICATION MFG. AXLE CODE LETTERS 1.5 INCHES HIGH STAMPED IN YELLOW INK ON LEFT BRAKE DRUM IN AREA OF WHEEL BOLTS

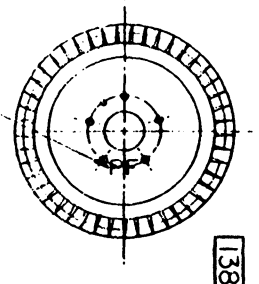

AXLE ASSEMBLY MARKINGS FOR MANUFACTURING INFORMATION ONLY		
COLOR CODE		
GEAR RATIO	STANDARD AXLES	POSITIVE TRACTION AXLES
2.56	SILVER	SILVER & ORANGE
2.73	PINK	PINK & ORANGE
2.28	BLACK	BLACK & ORANGE
2.93	DARK BLUE	DARK BLUE & ORANGE
3.07	WHITE	WHITE & ORANGE
3.23	GREEN	GREEN & ORANGE
3.42	LIGHT BLUE	LIGHT BLUE & ORANGE
3.64	BROWN	BROWN & ORANGE
3.91	PURPLE	PURPLE & ORANGE

● - NOT AVAILABLE WHN A/C

DO NOT SCALE — REPORT ERRORS
TOLERANCES UNLESS OTHERWISE SPECIFIED
X ALLOWED ON TWO PLACE DECIMALS
X.XX ALLOWED ON THREE PLACE DECIMALS
COMMERCIAL TOLERANCES APPLY TO STANDARD PARTS - ROLLED SECTIONS - SHEET METAL GAGES - DRILLED AND PUNCHED HOLES.
BREAK ALL DRILLED HOLES COUNTERSINK ALL TAPPED HOLES 100 X 80°

CHG DATE	SCALE	DR P. FLANNIGAN
3-29-67		CK [illegible]
1968 ALL		APPR
REFERENCE		APPR
		APPR

MATERIAL SPEC

NAME

CHART - REAR AXLE ASSEMBLY MARKING

PART NO 1385209 | PAGE NO 4-81

SHEET 1 OF 2 SHEETS

1385209

DAVE GRAHAM INC. - 2015
ALL RIGHTS RESERVED

1385209

SERIES	ENGINE	TRANSMISSION	AXLE ASM RATIO USAGES																							
			STANDARD					ECONOMY					PERFORMANCE					SPECIAL CAR ORDER - POSITIVE TRACTION								
			RATIO	REGULAR	CODE	POSITIVE TRACTION	CODE	RATIO	REGULAR	CODE	POSITIVE TRACTION	CODE	RATIO	REGULAR	CODE	POSITIVE TRACTION	CODE	RATIO	NO "1"	CODE	RATIO	NO. "2"	CODE			
43327 - 69	250 L-6	3 - SPEED MANUAL																								
		2 - SPEED MANUAL (A/C)	3.31	1395950	LG	1395953	LV																			
43337 - 69		2 - SPEED AUTO	3.07	1395948	LD	1395951	LR	2.73	1395949	LE	1395952	LS	3.31			1395953	LV									
44087-39-67-69	350 V-8	3 - SPEED MANUAL	3.07	1395948	LD	1395951	LR																			
		2 - SPEED AUTO	2.56	1397001	LJ	1397002	LY						3.31	1395950	LG	1395952	LV									

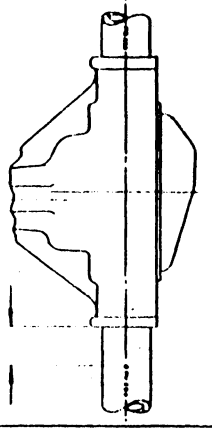

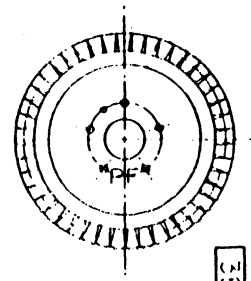

FOR ADDITIONAL INFORMATION
SEE SHEET NO. 1

DO NOT SCALE — REPORT ERRORS
TOLERANCES UNLESS OTHERWISE SPECIFIED
± ALLOWED ON TWO PLACE DECIMALS
± .010 ALLOWED ON THREE PLACE DECIMALS
COMMERCIAL TOLERANCES APPLY TO STANDARD PARTS - ROLLED SECTIONS - SHEET METAL GAGES - DRILLED AND PUNCHED HOLES
BURN ALL DRILLED HOLES COUNTERSINK ALL TAPPED HOLES .030 X 90°

DWG DATE 3-29-67 — SCALE — DR P. PLAMONDON
FIRST USED — CK — APPR
REFERENCE — APPR — APPR

CANADIAN USAGE

NAME
CHART REAR AXLE ASSEMBLY MARKING

PART NO 1385209 — PAGE NO. 4-8.2
SHEET 2 OF 2 SHEETS

101

1385209

DAVE GRAHAM INC. - 2015
ALL RIGHTS RESERVED

	PAGES
Master Cylinder Usage & Identification	5-1.2
Brake & Wheel Information Assy. & Drum Special Paint Requirements when Chrome Wheel Option is specified	5-2.1
Brake & Wheel Information Assy. & Drum Special Paint Requirements with Chrome Wheel Option	5-3.1
Disc Brake Pipe & Master Cylinder Installation. For further info., see 5-5.1 - 5-6.1 - 5-7.1 or Front Brake & Wheel Information Page 5-2.1	5-4.1
Brake Pipes - Installations (All Models)	5-5.1
Brake Pedal & Master Cylinder Install. Manual & Power - with Manual or Auto. Transmission - Stoplight Switch & Hole use instructions	5-6.1
Brake System Installation & Test Procedures & Specifications (2 pages)	5-8.1 5-8.2
Parking Brake Installations Cable Guides - Connectors Routing - Light Switch & Pedal Installation - Pedal Covers - Color (Black only)	5-9.1

Revised 11-14-67
PART NUMBER- 1383770
PAGE NUMBER- 5.1.0

ng

DAVE GRAHAM INC. - 2015
ALL RIGHTS RESERVED

MASTER CYLINDER IDENTIFICATION

GENERAL INFORMATION

BRAKE MASTER CYLINDERS ARE IDENTIFIED BY LABEL TAG ATTACHED ABOUT THE BAIL WIRE ON MANUAL BRAKES AND WILL BE SLIPPED OVER THE BARBS OF THE VACUUM CHECK VALVE ON POWER BRAKE CYLINDERS.

USAGE	ASM. NO.	I.D. CODE
Power - (Drum)	5468302	UA
Power - Disc	5468161	TH
Manual Brake	5452480	RK

Brake Drum Identification Color

The Front Brake and Wheel Assemblies as shipped by Factory 31 are color-coded on the backing plate below the Steering Arm for usage identification as follows:

1. Cast iron drums - All A Series except GS - (White Paint Daub)
2. Aluminum Drums - 446 GS (White Daub)
3. Aluminum Drums - 448 Sportwagons (Black Daub)

Note: Brakes must be used as released due to specific brakeshoe Assembly for the GS and Sportwagon.

DAVE GRAHAM INC. - 2015
ALL RIGHTS RESERVED

DAVE GRAHAM INC. - 2015
ALL RIGHTS RESERVED

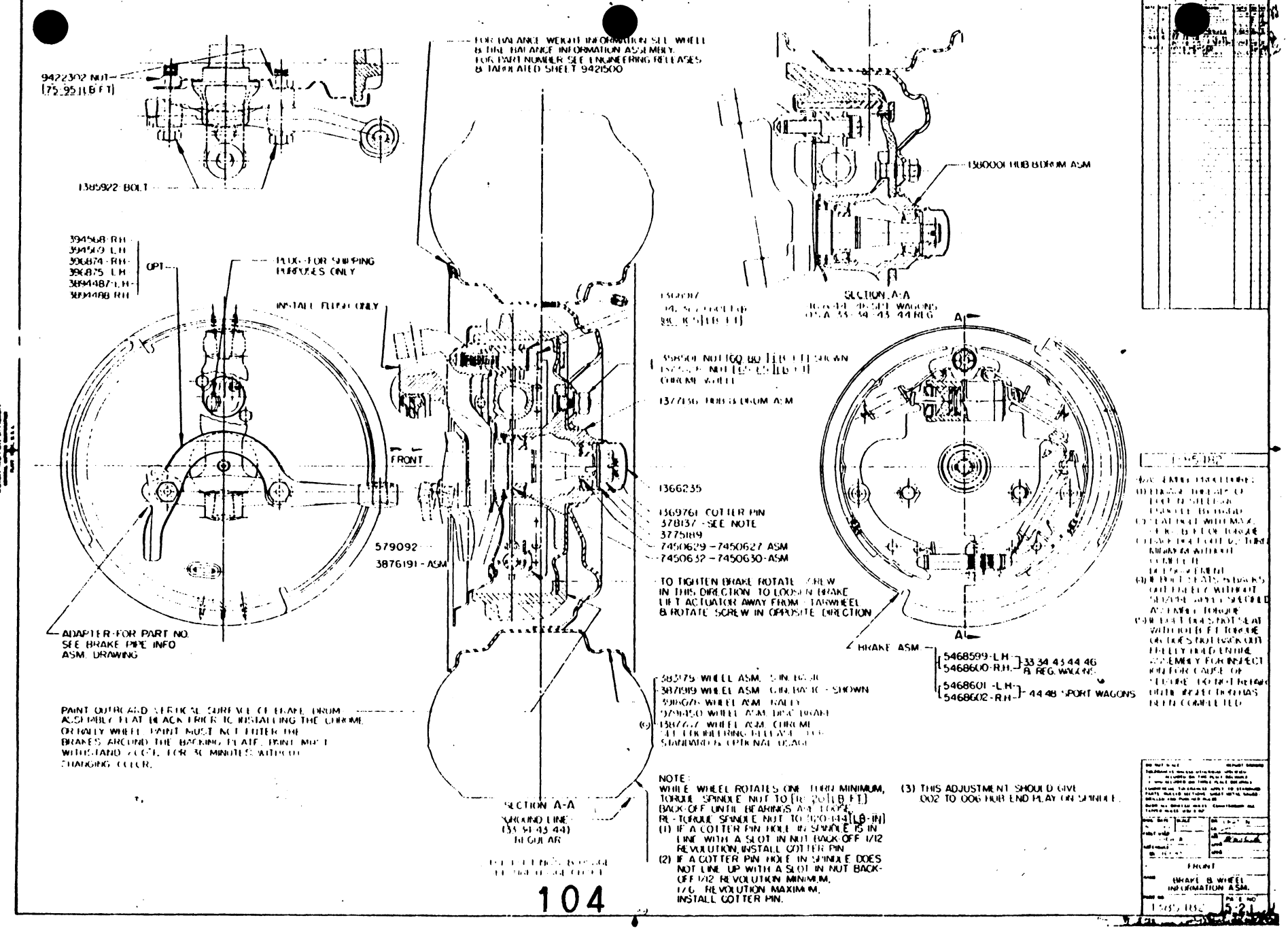

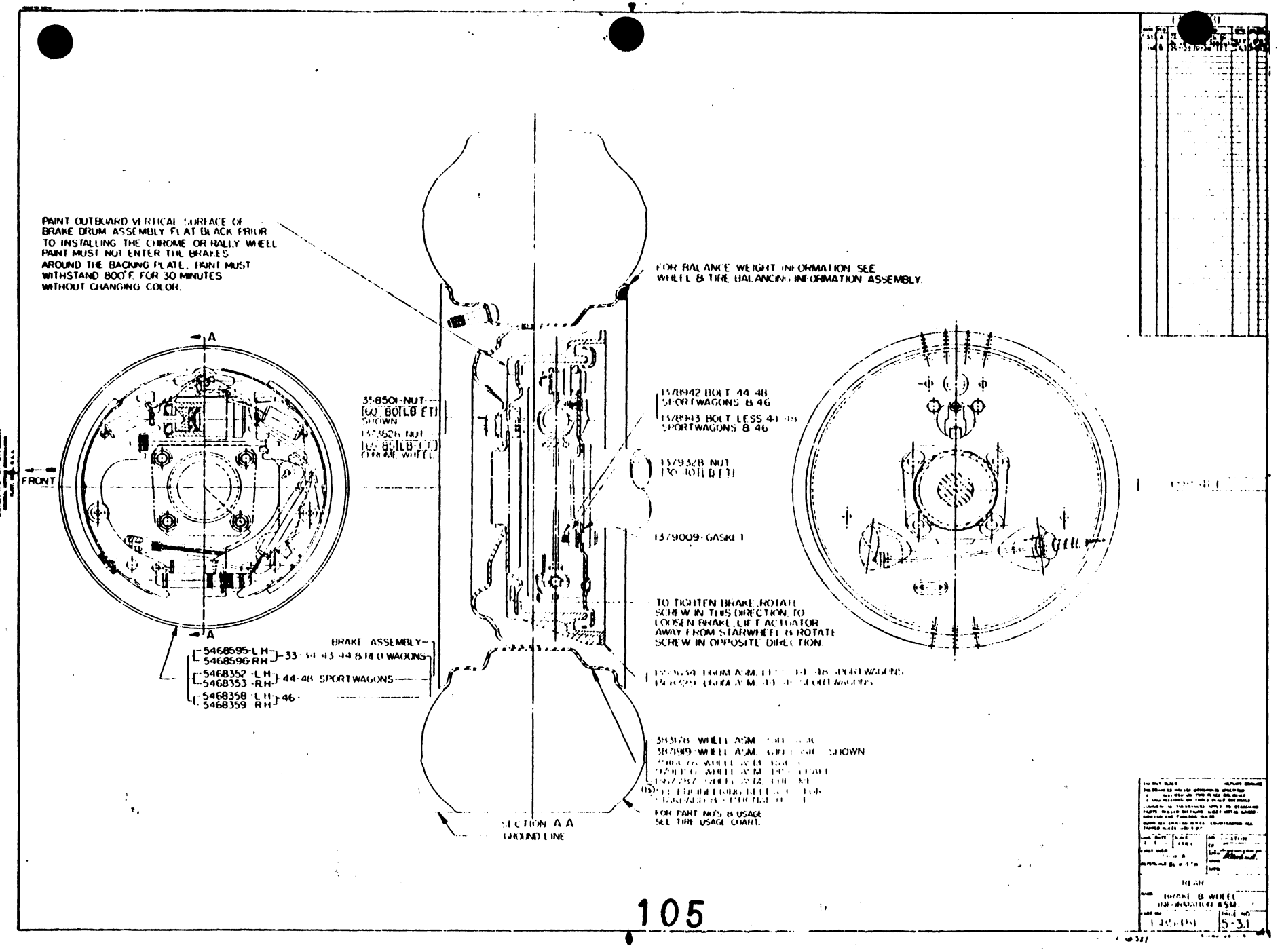

DAVE GRAHAM INC. - 2015
ALL RIGHTS RESERVED

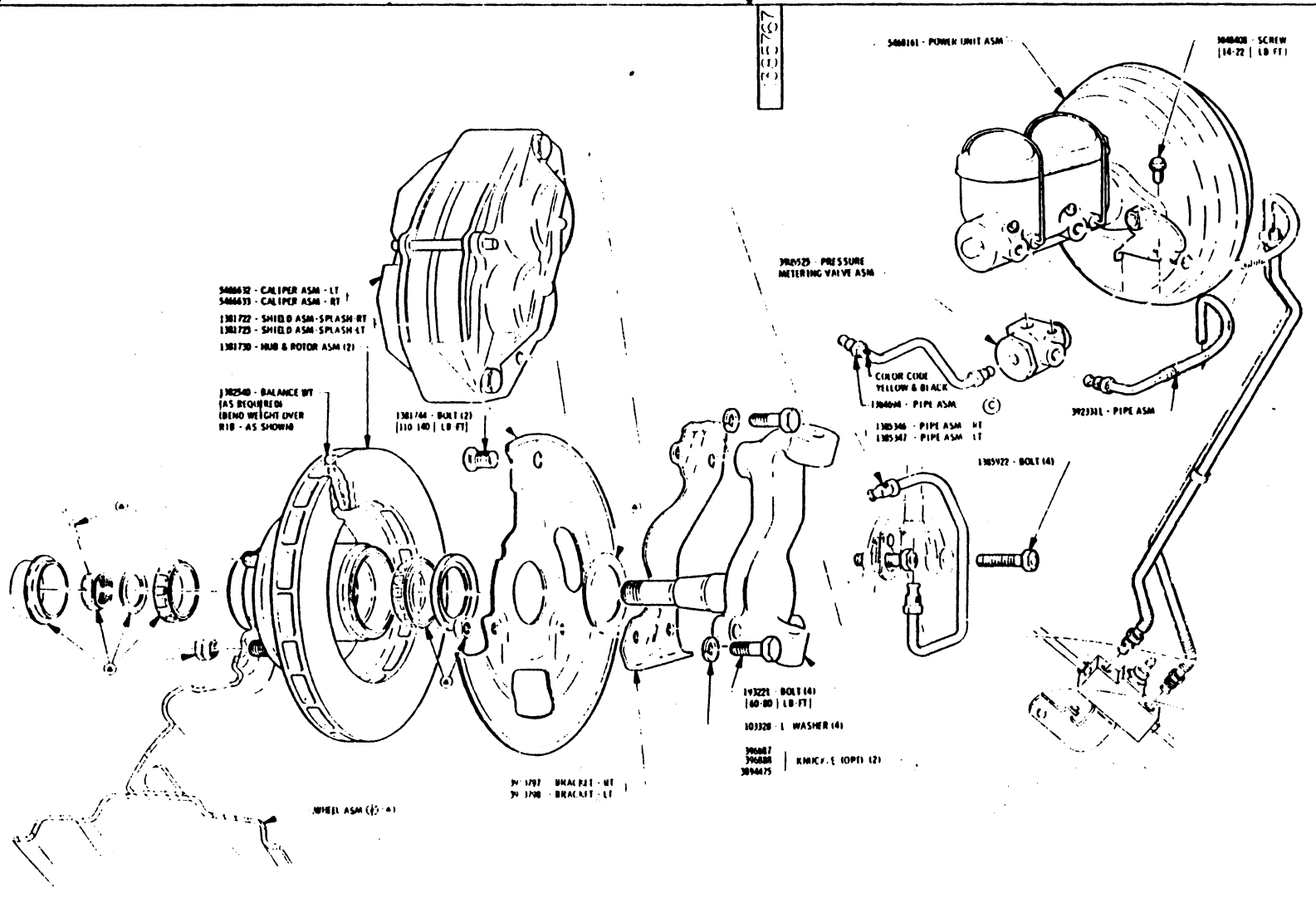

(C) FOR WHEEL PART NOS. & INSTALLATION SEE REAR BRAKE & WHEEL INFO. ASM DRAWING

(A) FOR PART NOS. & INSTALLATION SEE FRONT BRAKE & WHEEL INFO. ASM DRAWING.

FOR FURTHER INFORMATION ON MASTER CYLINDER AND BRAKE PIPES, SEE BRAKE PEDAL AND MASTER CYLINDER INFO. ASM DRAWING AND BRAKE PIPE INFORMATION ASM DRAWING.

DATE	SYM	REVISION RECORD	AUTH	SD	CK
[illegible]	[illegible]	[illegible]			
[illegible]	B	1381745 TO 1385922	[illegible]	[illegible]	[illegible]
[illegible]	[illegible]	[illegible]	[illegible]	[illegible]	[illegible]

DO NOT SCALE — REPORT ERRORS

TOLERANCES UNLESS OTHERWISE SPECIFIED
± ALLOWED ON TWO PLACE DECIMALS
± .010 ALLOWED ON THREE PLACE DECIMALS
COMMERCIAL TOLERANCES APPLY TO STANDARD PARTS - ROLLED SECTIONS SHEET METAL GAGES - DRILLED AND PUNCHED HOLES
BURR ALL DRILLED HOLES COUNTERSINK ALL TAPPED HOLES .030 X 90°

DWG DATE	SCALE	DR H. ANDERSON
5-10-67	-- N --	CK
FIRST USED		APPR
1968 A		APPR
REFERENCE		APPR
HE 365UB 81-16847		
MATERIAL SPEC		

NAME: DISC BRAKES, PIPES & MASTER CYLINDER INFORMATION ASM.

PART NO: 1385767 — PAGE NO: 541

1385767

DAVE GRAHAM INC. - 2015
ALL RIGHTS RESERVED

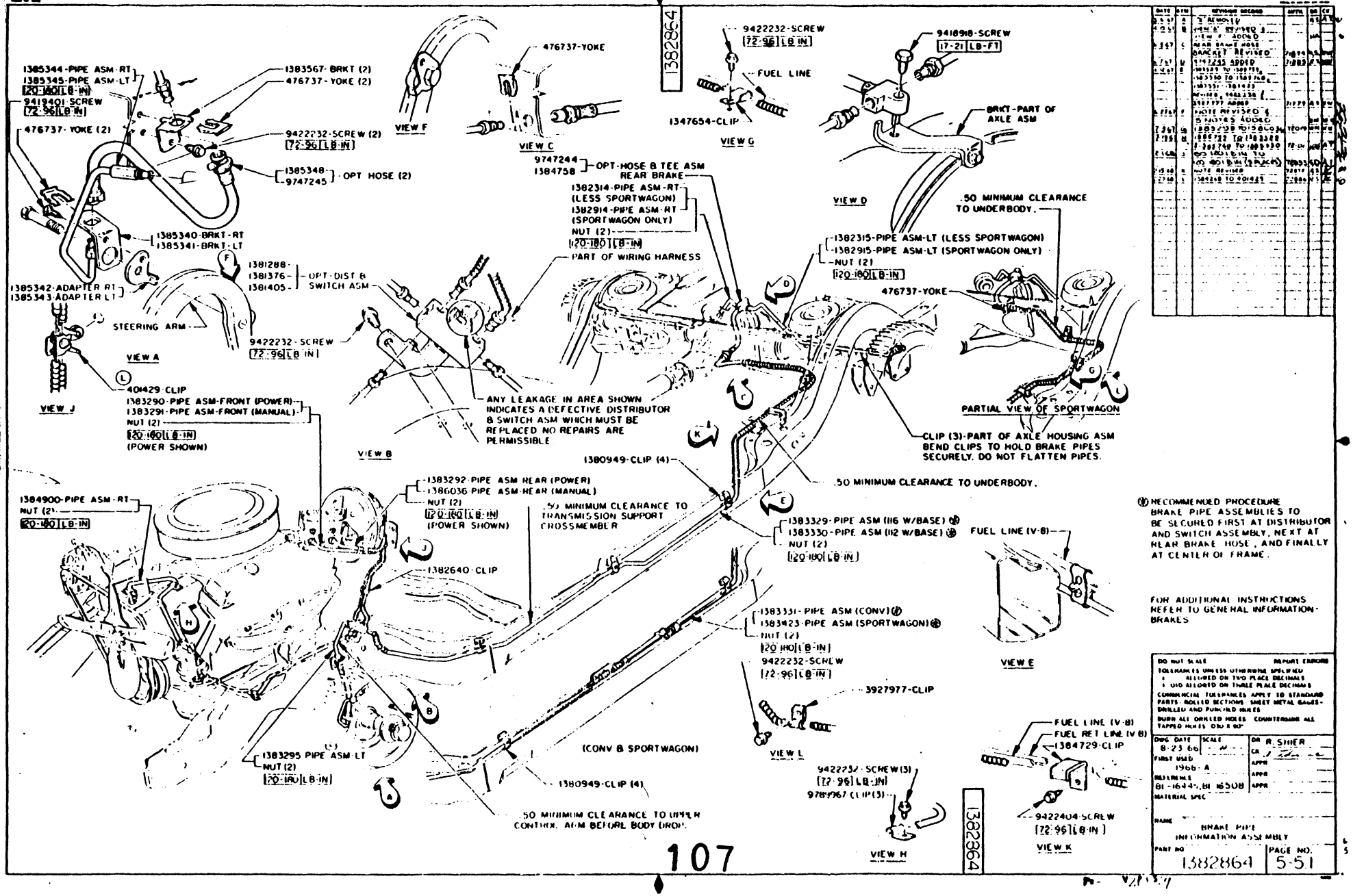

DAVE GRAHAM INC. - 2015
ALL RIGHTS RESERVED

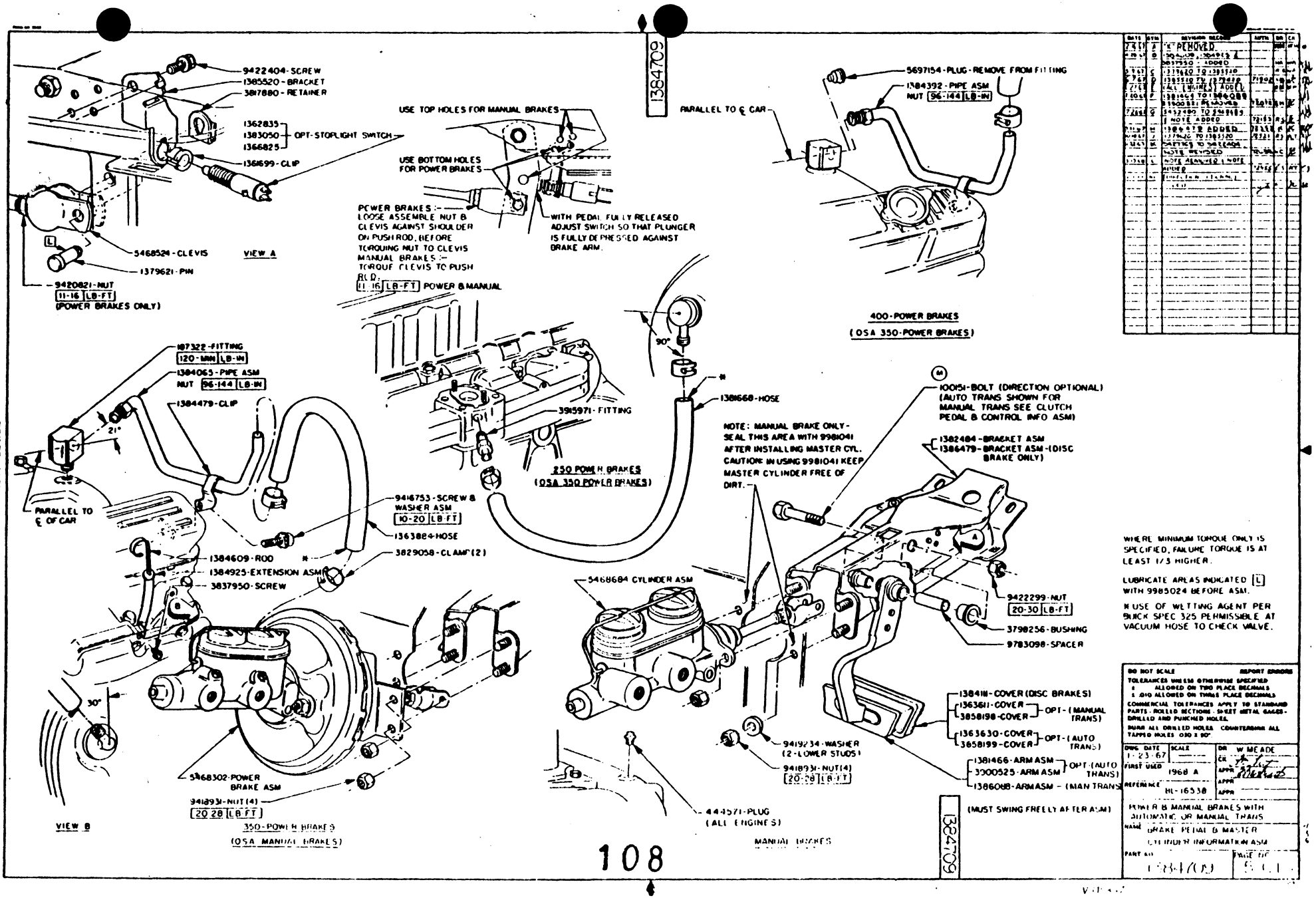

DAVE GRAHAM INC. - 2015
ALL RIGHTS RESERVED

BUICK MOTOR DIVISION
GENERAL MOTORS CORPORATION
FLINT, MICH., U. S. A.

CARE AND STORAGE OF BRAKE FLUID

IN FILLING THE HYDRAULIC SYSTEM OF PASSENGER CARS AND TRUCKS, USE ONLY THE RELEASED BRAKE FLUID. ANY SUBSTITUTE MUST HAVE THE APPROVAL OF THE DIVISIONAL ENGINEERING DEPARTMENTS. THE USE OF ANY OTHER FLUID MAY SERIOUSLY AFFECT THE OPERATION OF THE BRAKES.

THIS FLUID MUST BE CLEAN. CONTAMINATION OF BRAKE FLUID BY MINERAL OIL, GASOLINE, OR OTHER IMPURITIES CANNOT BE TOLERATED. THESE IMPURITIES CAN RESULT IN SERIOUS DAMAGE TO THE BRAKE SYSTEM. CONTAMINATED FLUID CANNOT BE SALVAGED AND MUST BE DISCARDED. FLUID CONTAINING MORE THAN 2 TENTHS OF ONE PERCENT (i. e., 0.2%) MINERAL OIL BY VOLUME MEASURED AT THE FLUID SUPPLY ATTACHMENT TO THE VEHICLE BRAKE SYSTEM SHALL BE CONSIDERED CONTAMINATED AND UNUSEABLE. CHECKS ARE TO BE MADE AT LEAST ONCE EVERY SHIFT. THE RECOMMENDED PROCEDURE INVOLVES THE USE OF A 100 cc PEAR-SHAPED CENTRIFUGE TUBE WHICH IS FILLED WITH THE TEST SAMPLE, STOPPERED, AND INVERTED. THE LIGHTER OIL SEPARATES AND COLLECTS IN THE TOP OF THE TUBE PERMITTING A DIRECT READING OF PERCENTAGE OF MINERAL OIL CONTAMINATION. THIS WILL NOT INDICATE THE PRESENCE OF FLUIDS SUCH AS GASOLINE OR KEROSENE WHICH REMAIN SUSPENDED. SAMPLES FOR LABORATORY TESTS ARE TO BE TAKEN EVERY TWO WEEKS.

BRAKE FLUID IS HYGROSCOPIC AND READILY PICKS UP MOISTURE FROM THE AIR. THIS GREATLY REDUCES ITS BOILING POINT. THE FLUID MUST BE SHIPPED AND STORED IN SEALED CONTAINERS UNTIL INTRODUCED INTO THE PLANT SYSTEM. SHIPPING CONTAINERS TO ASSEMBLY PLANTS SHOULD BE MARKED AND CERTIFIED WITH MOISTURE CONTENT WHEN SHIPPED FROM THE VENDOR. MOISTURE CONTENT SHOULD NEVER EXCEED 1% AS MEASURED AT THE FLUID SUPPLY ATTACHMENT TO THE VEHICLE BRAKE SYSTEM.

INITIAL FILLING AND BLEEDING

MASTER CYLINDERS

FILL MASTER CYLINDER IN SUCH A MANNER AS TO REMOVE THE AIR FROM THE PRESSURE CHAMBERS. MASTER CYLINDER, COVER, AND FLUID ARE TO BE HANDLED IN SUCH A WAY AS TO PREVENT ENTRY OF DIRT OR OTHER CONTAMINANTS INTO THE MASTER CYLINDER.

REMAINDER OF BRAKE HYDRAULIC SYSTEM

THE BRAKE LINES, WHEEL CYLINDERS, METERING VALVES (FRONT DISC BRAKE CARS), DISTRIBUTOR AND SWITCH ASSEMBLY, ETC. ARE TO BE FILLED IN SUCH A MANNER THAT AIR IS REMOVED. THIS MAY BE DONE BY:

(1) VACUUM BLEED METHOD WHEREBY THE HYDRAULIC SYSTEM, EXCLUSIVE OF THE MASTER CYLINDER IS SUBJECTED TO A VACUUM OF 5 MM ABSOLUTE AT WHICH TIME THE VACUUM LINE IS CLOSED AND THE BRAKE FLUID LINE TO THE HYDRAULIC SYSTEM IS OPENED. NOTE: PRESENT HYDRAULIC SYSTEMS DO NOT PERMIT VACUUM BLEEDING OF THE COMPLETE SYSTEM THROUGH THE MASTER CYLINDER.

(2) FLOW-THROUGH METHOD WHEREBY A BRAKE FLUID SUPPLY LINE UNDER A MAXIMUM PRESSURE OF 60 PSI IS CONNECTED TO THE BRAKE LINES AT THE MASTER CYLINDER END WHILE THE OPENED BLEEDER VALVES AT EACH WHEEL CYLINDER ARE SUBJECTED TO NO BACK PRESSURE FROM THE FLUID RETURN SYSTEM. A MINIMUM OF 15 SECONDS IS REQUIRED FOR THE FLUID FLOWING THROUGH THE LINES TO PUSH THE AIR OUT AHEAD OF IT. TIGHTEN BLEEDER VALVES. AN AUTOMATIC VALVE INSTALLED IN THE VACUUM LINE TO THE BLEED WRENCH SHOULD CLOSE WHEN WRENCH IS NOT IN USE.

NOTE:

IN EITHER CASE THE METERING VALVE (USED ON DISC BRAKE CARS) MUST BE BLOCKED OPEN TO PERMIT FREE PASSAGE OF FLUID.

PRECAUTIONS MUST BE TAKEN TO PREVENT LOSS OF FLUID AND/OR ENTRY OF CONTAMINANTS AFTER THE FILLING ADAPTER IS REMOVED FROM THE BRAKE LINES.

CARE MUST ALSO BE TAKEN TO AVOID SPILLING, OR SPLASHING BRAKE FLUID ON ANY PAINTED SURFACE, OR ON THE BACKING PLATES WHERE IT MAY COME INTO CONTACT WITH THE BRAKE LINING. BRAKE FLUID IS ALSO HARMFUL TO SOME PLASTICS AND RUBBER COMPOUNDS.

PRESSURE LEAK TESTING

EITHER OF TWO TYPES OF EQUIPMENT ARE NORMALLY USED TO PERFORM THIS TESTING:

(A) STARR KAP OR EQUIVALENT: IN THIS SYSTEM A PRESSURE OF 1800-2000 PSI IS TRAPPED IN THE BRAKE SYSTEM. A FALLING OFF OF THIS PRESSURE INDICATES A LEAK. A SYSTEM FREE OF LEAKS IS DEMONSTRATED BY A STABILIZED PRESSURE FOR 10 SECONDS MINIMUM.

(B) CONSTANT PRESSURE TYPE EQUIPMENT: IN THIS SYSTEM A CONSTANT PRESSURE OF 1800-2000 PSI IS APPLIED TO THE BRAKE SYSTEM. A MOVEMENT OF THE TEST EQUIPMENT APPLY PISTON INDICATES A LEAK. A SYSTEM FREE OF LEAKS IS DEMONSTRATED BY A STABILIZED APPLY PISTON POSITION FOR 10 SECONDS MINIMUM.

NOTE:

EITHER SYSTEM MUST BE CAPABLE OF DETECTING A LEAK OF ONE DROP OF BRAKE FLUID (55° TO 95° F) IN TEN SECONDS AT 1800-2000 PSI.

THE BRAKE SYSTEM OF EVERY CAR MUST BE PRESSURE LEAK TESTED IN FOUR STAGES TO DETECT ANY LEAKS IN ANY PART OF THE HYDRAULIC SYSTEM.

(1) HYDRAULIC SYSTEM EXCLUDING MASTER CYLINDER: THIS WILL CHECK THE BULK OF THE HYDRAULIC SYSTEM AND MAY POSSIBLY BE THE FINAL CHECK OF THE FRONT HALF OF THE SYSTEM.

(2) HYDRAULIC SYSTEM INCLUDING MASTER CYLINDER: THIS WILL CHECK THE CONNECTION OF THE BRAKE PIPE TO THE REAR OUTLET ON THE MASTER CYLINDER, BUT MAY NOT BE A VALID CHECK OF THE FRONT CONNECTION BECAUSE OF A POSSIBLE "BOTTOMING OUT" OF THE FRONT PISTON IN THE MASTER CYLINDER DUE TO SYSTEM DEFLECTIONS, OR PRESENCE OF AIR IN FRONT SYSTEM.

1383020

DATE	SYM	REVISION RECORD	AUTH	DR	CK
1967	C	REDRAWN & REVISED		MG	AT

1383020

DO NOT SCALE — REPORT ERRORS
TOLERANCES UNLESS OTHERWISE SPECIFIED
± ALLOWED ON TWO PLACE DECIMALS
± .010 ALLOWED ON THREE PLACE DECIMALS
COMMERCIAL TOLERANCES APPLY TO STANDARD PARTS - ROLLED SECTIONS - SHEET METAL GAGES - DRILLED AND PUNCHED HOLES
BURR ALL DRILLED HOLES. COUNTERSINK ALL TAPPED HOLES .030 X 90°.

DWG. DATE	SCALE	DR. P. PIAMONDON
9-7-66		CK
FIRST USED		APPR
1968 - ALL		APPR
REFERENCE		APPR
MATERIAL SPEC.		

NAME BRAKE SYSTEM, INSTALLATION AND TEST PROCEDURES AND SPECIFICATIONS

PART NO 1383020 — PAGE NO. 5-8.1

SHEET 1 OF 2 SHEETS

0 P 6 5

VH 17 C 15

DAVE GRAHAM INC. - 2015
ALL RIGHTS RESERVED

PRESSURE LEAK TESTING (continued)

NOTE: IF CONSTANT PRESSURE TYPE EQUIPMENT IS USED, IT MUST BE OF THE TYPE WHICH APPLIES PRESSURE TO THE REAR COMPENSATING PORT IN THE MASTER CYLINDER. THE USE OF A PUSH ROD JACK OR PEDAL JACK IS NOT PERMISSIBLE.

(3) BRAKE PIPE TO FRONT CONNECTION OF MASTER CYLINDER: A VISUAL CHECK MUST BE MADE JUST PRIOR TO RELEASE OF 1800-2000 PSI AS LISTED IN ABOVE STEP. ANY WETNESS AROUND THIS CONNECTION SHALL BE CAUSE FOR REJECTION. (C)

(4) FINAL CHECK: PRIOR TO, OR AT FIRST DRIVE-AWAY POINT, A FORCE OF 150 TO 200 * POUNDS SHALL BE APPLIED TO THE BRAKE PEDAL (PARKING BRAKE RELEASED AND POWER BRAKES WITH ASSIST). STEADY BURNING OF THE WARNING LIGHT SHALL BE CAUSE FOR REJECTION.

NOTE:
A CONTINUITY CHECK OF THE WARNING LIGHT CIRCUIT (UP TO THE ATTACHMENT OF THE LEAD TO THE DISTRIBUTOR AND SWITCH ASSEMBLY) MUST BE MADE, AND THE LEAD ATTACHED PRIOR TO THE FINAL CHECK.

ANY CARS FAILING TO PASS THE PRESSURE TEST MUST BE REPAIRED AND RECHECKED IN A MANNER WHICH WILL CHECK NOT ONLY THE DEFECTIVE AREA, BUT OTHER AREAS NOT ADEQUATELY CHECKED BECAUSE OF THE ORIGINAL DEFECT.

TESTING OF THE GUARDIAN LIGHT SWITCH

THE DISTRIBUTOR AND SWITCH ASSEMBLY FUNCTION MUST BE 100% CHECKED BY ATTACHING A TEST PROBE TO THE TERMINAL AND APPLYING 250 TO 300 PSI. DIFFERENTIAL PRESSURE, FIRST TO ONE SIDE AND THEN TO THE OTHER. APPLICATION OF THE PRESSURE SHOULD PRODUCE AN APPROPRIATE SIGNAL. EXCEPTIONS TO THIS TEST SHALL BE MADE ONLY WITH WRITTEN PERMISSION OF THE DIVISIONAL QUALITY CONTROL REPRESENTATIVE. ANY LEAKAGE AROUND SWITCH (I.e. AT THREADS OR TERMINAL) AT ANY TIME INDICATES A DEFECTIVE PART REQUIRING REPLACEMENT OF THE COMPLETE DISTRIBUTOR AND SWITCH ASSEMBLY. NO REPAIRS ARE PERMISSIBLE.

BRAKE LINES AND HOSES

BEFORE ANY CAR LEAVES THE ASSEMBLY PLANT, AN INSPECTION MUST BE MADE OF BRAKE LINES AND HOSES. LINES MUST NOT BE KINKED, FLATTENED, OR BENT OUT OF DESIGNED POSITION. IN PARTICULAR, UNLESS COVERED BY DRAWING SPECIFICATIONS, LINES MUST HAVE AT LEAST 3/8" CLEARANCE TO ANY MOVING COMPONENT (I.e., STEERING SHAFT, SHIFT LEVERS, ETC.) AND 1/2" CLEARANCE TO ANY VIBRATING PART (I.e., UNDERBODY, POWER BRAKE BOOSTER, ETC.) UNLESS IT IS SPECIFICALLY CLIPPED TO THESE COMPONENTS. THERE MUST BE NO EVIDENCE OF HOSE TWIST.

FUEL LEVEL IN RESERVOIRS

THE FLUID LEVEL ON ALL COMPLETED CARS MUST BE 1/4" PLUS OR MINUS 1/8" FROM THE LOWEST PORTION OF THE TOP OF EACH RESERVOIR.

PRESSURE LEAK TESTING EQUIPMENT

THE EQUIPMENT SHOULD BE DESIGNED AND MAINTAINED IN SUCH A MANNER AS TO REDUCE REQUIRED OPERATOR JUDGMENT TO A MINIMUM. IT MUST INCLUDE A TIMER (IN OPERATING CONDITION) SET FOR 10 SECONDS WITH AN APPROPRIATE SIGNAL INCLUDED.

A FUNCTIONAL CHECK OF THE EQUIPMENT IS TO BE MADE AT LEAST ONCE EVERY SHIFT WITH ADEQUATE RECORDS MAINTAINED.

ANY CARS FAILING TO RECEIVE A PRESSURE CHECK BECAUSE OF EQUIPMENT MALFUNCTION MUST BE IDENTIFIED SO THAT THEY CAN BE CHECKED BEFORE LEAVING THE ASSEMBLY PLANT.

WEAVER BRAKE TEST EQUIPMENT

ALL CARS ARE TO BE CHECKED ON THIS EQUIPMENT WITH A MAXIMUM DECELERATION OF 15 FT/SEC^2 FROM A MAXIMUM SPEED OF 10 M. P. H. (RECOMMENDED SPEED OF 4 M. P. H.). THERE MUST BE A MINIMUM OF 200 POUNDS OF BRAKING EFFORT AT EACH WHEEL. MAKE A PERMANENT (SINGLE PUNCH) RECORD TO SHOW THAT THE VEHICLE HAS PASSED THE TEST.

NOTE:
THIS IS A HARD STOP WHICH WOULD BE CONSIDERABLY SHORT OF WHEEL SLIDE ON DRY PAVEMENT. HARDER STOPS OR FAST APPLY RATES MAY GIVE INDICATIONS OF PROBLEMS WHICH DO NOT REALLY EXIST.

(C) * THIS IS EQUIVALENT TO A HARD APPLICATION BY AN AVERAGE SIZE MALE.

1383020

DATE	SYM	REVISION RECORD		DR	CK
3 967	A	REDRAWN & REVISED		#0	AT
4-24-67	B	NOTE REVISED	71655	JH	AT
9-17-67	C	ASTERISK ADDED TO NOTE "4 AND NOTE ADDED.		CO	AT

1383020

BUICK MOTOR DIVISION
GENERAL MOTORS CORPORATION
FLINT, MICH. U. S. A.

DO NOT SCALE — REPORT ERRORS
TOLERANCES UNLESS OTHERWISE SPECIFIED
± ALLOWED ON TWO PLACE DECIMALS
± .010 ALLOWED ON THREE PLACE DECIMALS
COMMERCIAL TOLERANCES APPLY TO STANDARD PARTS - ROLLED SECTIONS - SHEET METAL GAGES - DRILLED AND PUNCHED HOLES
BURR ALL DRILLED HOLES. COUNTERSINK ALL TAPPED HOLES .030 X 90°.

DWG. DATE	SCALE	DR P. PLAMONDON
9-7-66		CK
FIRST USED 1968 - ALL		APPR
REFERENCE		APPR.
		APPR.
MATERIAL SPEC		

NAME BRAKE SYSTEM: INSTALLATION AND TEST PROCEDURES AND SPECIFICATIONS.

PART NO. 1383020 SHEET 2 OF 2 SHEETS

PAGE NO. 5-8.2

Pa. V3P7S75

DAVE GRAHAM INC. - 2015
ALL RIGHTS RESERVED

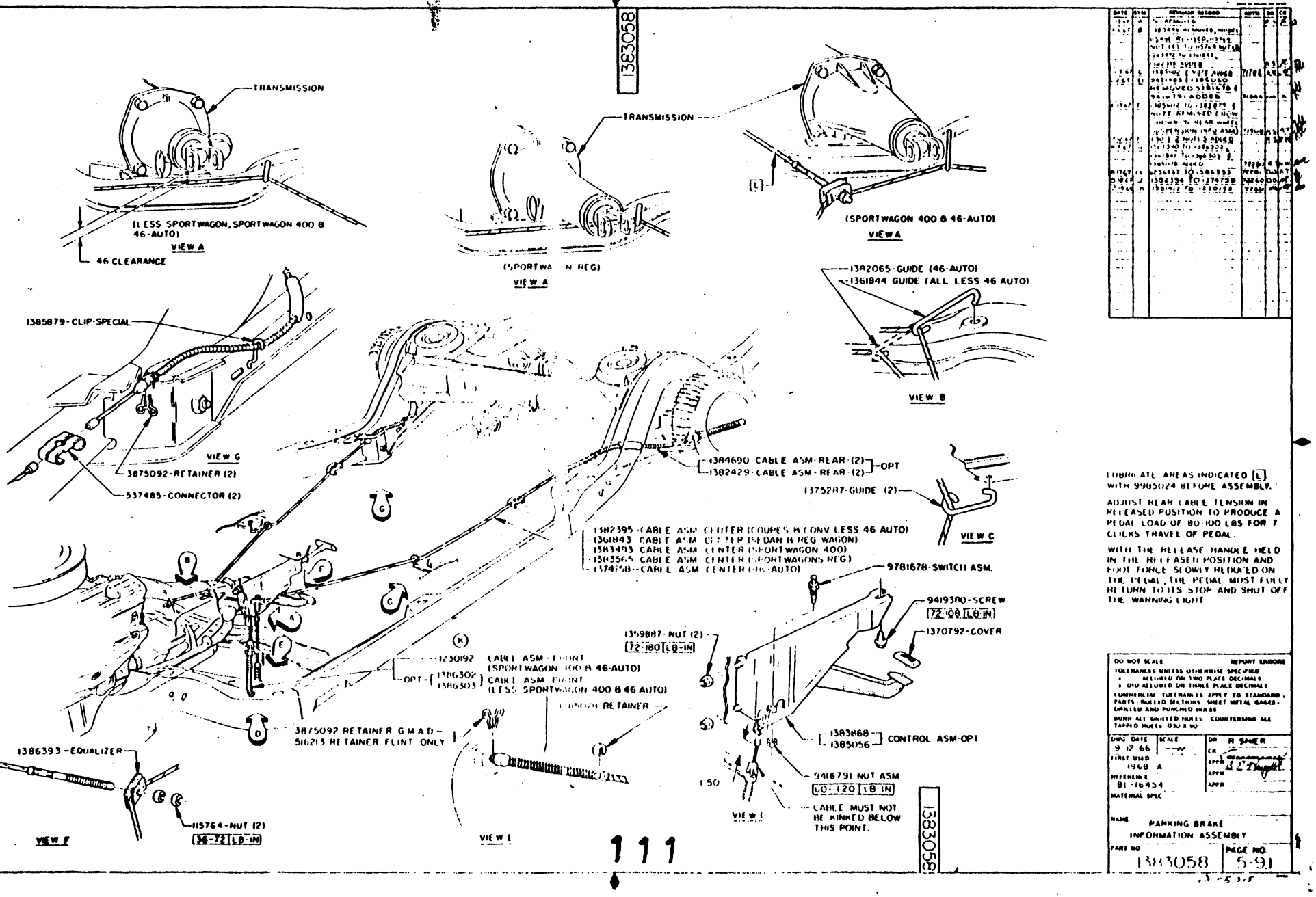

LUBRICATE AREAS INDICATED [L] WITH 9985024 BEFORE ASSEMBLY.

ADJUST REAR CABLE TENSION IN RELEASED POSITION TO PRODUCE A PEDAL LOAD OF 80-100 LBS FOR 7 CLICKS TRAVEL OF PEDAL.

WITH THE RELEASE HANDLE HELD IN THE RELEASED POSITION AND FOOT FORCE SLOWLY REDUCED ON THE PEDAL, THE PEDAL MUST FULLY RETURN TO ITS STOP AND SHUT OFF THE WARNING LIGHT

DO NOT SCALE — REPORT ERRORS
TOLERANCES UNLESS OTHERWISE SPECIFIED
.X ALLOWED ON TWO PLACE DECIMALS
.XXX ALLOWED ON THREE PLACE DECIMALS
COMMERCIAL TOLERANCES APPLY TO STANDARD PARTS. ROLLED SECTIONS, SHEET METAL GAGES, DRILLED AND PUNCHED HOLES
BURR ALL DRILLED HOLES. COUNTERSINK ALL TAPPED HOLES .030 X 90°

ENG DATE 9 12 66	SCALE —	DR R SAMER	
FIRST USED 1968 A		CK	
REFERENCE 81-16454		APPR	
MATERIAL SPEC		APPR	
		APPR	

NAME
PARKING BRAKE
INFORMATION ASSEMBLY

PART NO 1383058 | PAGE NO 5-91

DAVE GRAHAM INC. - 2015
ALL RIGHTS RESERVED

	PAGES
Air Cleaner Code & Usage - Chart	6-1.3
Engine Adjustments Ignition Timing & Instructions	6-2.0
Engine Identification - Charts Prefixes - Mfg. Code (5 pages)	6-2.1 thru 6-2.5
Engine & Transmission Mounting	6-3.1
Fast Idle Cable Installation & Hole Drilling Requirements	6-5.1
Throttle Control Information - Linkage - Installations & Adjustment - Accelerator Pedal Installation and Height. Auto. & Man. Trans.	6-6.1
Cruise Control - Installation	6-7.1
Delcotron - Heavy Duty - 60 AMP Heavy Duty	6-8.1
Pulleys & Belts - Charts - V8 Usage & Identification Codes - L6	6-12.1 6-13.1
Engine Build-Up Information - L6 250 cu. in. - 4 pages	6-15.1 thru 6-15.4
Engine Build-Up Information - V8 350 cu. in. 2BBL - 4BBL (3 pages)	6-17.1 thru 6-17.3
Engine - Timing & Idle Label Chart	6-18.1
Engine Block Heater Information	6-19.1
Engine Build-Up Information - V8 400 - 430 cu. in. (2 pages)	6-20.1 6-20.2

Revised 8-1-67
PART NUMBER- 1383770
PAGE NUMBER- 6-1.0

DAVE GRAHAM INC. - 2015
ALL RIGHTS RESERVED

	PAGES
Engine Build-Up Information - L6 250 cu. in. - 4 pages	6-15.1 thru 6-15.4
*Engine Build-Up Information 350 cu. in. 2bbl. - 4bbl.	6-17.1 6-17.2 6-17.3
Engine - Timing & Idle Label Chart	6-18.1
Engine Block Heater Information	6-19.1
Engine Build-Up Information 400 - 430 cu. in. (2 pages)	6-20.1 6-20.2

*6-13-67

PART NUMBER- 1383770

PAGE NUMBER- 6-1.1

DAVE GRAHAM INC. - 2015
ALL RIGHTS RESERVED

AIR CLEANER CODE AND USAGE

STD. CLEANER	CODE	USAGE
6424423	CD	# L-6 Auto
6483657	CE	# L-6 Manual
6424910	BB	350-2bbl
6424344	BA	350-430-4bbl
6484022	BC	All GS

HEAVY DUTY CLEANER (K-45 Option)

6484314	BG	L-6 Auto H.D.
6484186	BD	350-2bbl
6484312	BE	350-430-4bbl
6484313	BF	All GS

NOTE: Heavy Duty Option not offered on L-6 Manual.

*7-10-67

PART NUMBER 1383770
PAGE NUMBER 113

DAVE GRAHAM INC. - 2015
ALL RIGHTS RESERVED

BUICK MOTOR DIVISION
GENERAL MOTORS CORPORATION
FLINT, MICH., U. S. A.

ENGINE ADJUSTMENTS

ENGINE TYPE	MANUFACTURING PREFIX LETTERS	IDLE SPEED (RPM) MAN. TRANS.	A/C	AUTO. TRANS.	A/C	IGNITION TIMING ± 2°
250 MV		700	OFF			0° TDC
250 MV				500	ON	4° BTDC
350-2 GV	PO	700	OFF			0° TDC
350-2 GV	PO			500	OFF	0° TDC
350-4 MV	PP	700	OFF			0° TDC
350-4 MV	PP			550	OFF	0° TDC
400-4 MV	PR	700	OFF			2-1/2° ATDC
400-4 MV	PR			600	OFF	0° TDC
430-4 MV	PD			550	OFF	0° TDC

ADJUSTMENTS:

1. ENGINE MUST BE WARM, THE CARBURETOR THROTTLE STOP MUST BE OFF OF THE FAST IDLE CAM AND THE HOT IDLE COMPENSATOR VALVE CLOSED BEFORE MAKING ADJUSTMENTS.

2. MAKE IDLE SPEED ADJUSTMENT TO PROVIDE SPECIFIED SPEED IN NEUTRAL ON MANUAL TRANSMISSION CARS AND IN DRIVE RANGE ON AUTOMATIC TRANSMISSION CARS. AIR CONDITIONED CARS ARE TO BE ADJUSTED WITH AIR CONDITIONING AS SPECIFIED.

3. IDLE MIXTURE ADJUSTMENT FOR AUTOMATIC TRANSMISSION:
   ADJUST IDLE SPEED TO 10 TO 15 R. P. M. HIGHER THAN SPECIFIED. ADJUST MIXTURE, (ON EACH SIDE WITH 2 & 4 BBL. CARBURETOR MODELS) FOR SMOOTHEST IDLE. SLIGHT READJUSTMENT OF SPEED MAY BE NECESSARY IN THE COURSE OF MIXTURE ADJUSTMENT. THEN ADJUST MIXTURE SCREWS EQUALLY TO LEAN MIXTURES SUFFICIENTLY TO REDUCE IDLE SPEEDS 10 TO 15 R. P. M.

4. IGNITION TIMING: (1) ENGINE NOT RUNNING, HOLD CAMSHAFT REARWARD WITH DISTRIBUTOR SHAFT HELD UPWARD AND COUNTER-CLOCKWISE. (2) ENGINE RUNNING, DISCONNECT AND PLUG DISTRIBUTOR VACUUM HOSE.

* NOTE: 250 CU. IN. ENGINE (WITH AUTO. TRANS.) IDLE SPEED TO BE SET WITH IDLE SPEED SOLENOID ADJUSTING SCREW.

1385033

DATE	SYM	REVISION RECORD	AUTH	DR	CK
8-23-67	B	REDRAWN & REVISED	72278	PP	

1385033

DO NOT SCALE — REPORT ERRORS
TOLERANCES UNLESS OTHERWISE SPECIFIED
± ALLOWED ON TWO PLACE DECIMALS
± .010 ALLOWED ON THREE PLACE DECIMALS
COMMERCIAL TOLERANCES APPLY TO STANDARD PARTS - ROLLED SECTIONS - SHEET METAL GAGES - DRILLED AND PUNCHED HOLES.
BURR ALL DRILLED HOLES. COUNTERSINK ALL TAPPED HOLES .030 X 90°.

DWG. DATE 2-23-67	SCALE	DR. P. PLAMONDON
FIRST USED 1968		CK.
REFERENCE		APPR.
		APPR.
		APPR.

MATERIAL SPEC.

NAME
CHART - ENGINE ADJUSTMENTS

PART NO.	PAGE NO.
1385033	6-2.0

V3 PG 515

DAVE GRAHAM INC. - 2015
ALL RIGHTS RESERVED

1968 ENGINE IDENTIFICATION CHART - 1 BBL. 250 CUBIC INCH

ENGINE PREFIX	MFG. CODE	PART NUMBER	COMP RATIO EXP.	COMP RATIO STD.	TRANSMISSION MAN.	TRANSMISSION AUTO.	AIR CONDITIONING
•	SA	1383434		X	X		
	SB	1383435		X	X		X
	SD	1383437		X		X	
	SE	1383438		X		X	X
	SC	1383436	X		X		
	SF	1383439	X			X	
	SG	1384497	X			X	X
	SH	1387295	X		X		X

* THE L-6 250 CU. IN. ENGINE WILL CARRY CHEVROLET'S METHOD OF IDENTIFICATION.

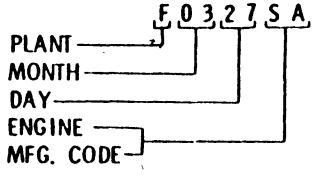

1385004 Sheet 1 of 5

116

DATE	SYM.	REVISION RECORD	AUTHORITY	DR	CK
3-20-67	A	LA to SA, LG to SB, LC to SD, LH to SE, MA to SC, MC to SF & MH to SG. Note Added		PP	
11-7-67	B	1387295 Added	72611	PP	

DO NOT SCALE REPORT ERRORS
TOLERANCES UNLESS OTHERWISE SPECIFIED
±. ALLOWED ON TWO PLACE DECIMALS
±.010 ALLOWED ON THREE PLACE DECIMALS
COMMERCIAL TOLERANCES APPLY TO STANDARD PARTS - ROLLED SECTIONS - SHEET METAL GAGES - DRILLED AND PUNCHED HOLES.
BURR ALL DRILLED HOLES COUNTERSINK ALL TAPPED HOLES .030 X 90°

DWG. DATE 2-21-67 | SCALE
FIRST USED 1968
DR. P. Plamondon
CK
APPR.
APPR.
APPR.
REFERENCE
MATERIAL SPEC.
NAME CHART - ENGINE IDENTIFICATION
PART NO. 1385004 SHEET 1 of 5
PAGE NO. 6-2.1

GENERAL MOTORS CORPORATION
FLINT, MICH., U. S. A.

V4 P6 523

DAVE GRAHAM INC. - 2015
ALL RIGHTS RESERVED

BUICK MOTOR DIVISION
GENERAL MOTORS CORPORATION
FLINT, MICH., U.S.A.

1968 ENGINE IDENTIFICATION CHART - 2 & 4 MV 350 CUBIC INCH
ALL ENGINES ASSEMBLED IN FACTORY #36

ENGINE PREFIX	MFG. CODE	PART NUMBER	COMP RATIO EXP	COMP RATIO STD	COMP RATIO HI	CARB 2BBL	CARB 4MV	TRANS. MAN.	TRANS. AUTO.	LESABRE	SPORT WAGON	SPECIAL
~~PO~~	~~OA~~	~~1395910~~		~~X~~		~~X~~		~~X~~		~~X~~		
PO	OB	1395911		X		X		X		X	X	X
PO	OC	1395912		X		X			X	X	X	X
PP	OD	1395913			X		X	X			X	X
PP	OE	1395914			X		X		X	X	X	X
PW	OF	1395915	X			X		X		X	X	X
~~PW~~	~~0G~~	~~1395916~~	~~X~~			~~X~~		~~X~~		~~X~~		
PW	OH	1395996	X			X			X	X	X	X

DATE	SYM.	REVISION RECORD	AUTHORITY	DR.	CK.
3-22-67	A	1395910 & 1395916 Removed: 1395911 & 1395915 LeSabre Added 1395996 Added		PP	MR

DO NOT SCALE REPORT ERRORS
TOLERANCES UNLESS OTHERWISE SPECIFIED
± . ALLOWED ON TWO PLACE DECIMALS
± .010 ALLOWED ON THREE PLACE DECIMALS
COMMERCIAL TOLERANCES APPLY TO STANDARD PARTS - ROLLED SECTIONS - SHEET METAL GAGES - DRILLED AND PUNCHED HOLES.
BURR ALL DRILLED HOLES. COUNTERSINK ALL TAPPED HOLES .030 X 90°

DWG. DATE 2-21-67	SCALE
DR. P. Plamondon	
FIRST USED 1968	CK.
APPR.	
REFERENCE	APPR.
APPR.	
MATERIAL SPEC.	
NAME CHART - ENGINE IDENTIFICATION	
PART NO. 1385004 SHEET 2 of 5	PAGE NO. 6-2.2

BUICK

1385004 Sheet 2 of 5

117

V4 P17 525

0965

DAVE GRAHAM INC. - 2015
ALL RIGHTS RESERVED

1968 ENGINE IDENTIFICATION CHART - 4 MV 400 CUBIC INCH
ALL ENGINES ASSEMBLED IN FACTORY #36

ENGINE PREFIX	MFG. CODE	PART NUMBER	TRANSMISSION MAN	TRANSMISSION AUTO	AIR COND.	SPORT WAGON	SPECIAL
PR	PA	1395917	X				X
PR	PB	1395918	X		X		X
PR	PC	1395919		X		X	X
PR	PD	1395920		X	X	X	X

BUICK MOTOR DIVISION
GENERAL MOTORS CORPORATION
FLINT, MICH., U. S. A.

DATE	SYM.	REVISION RECORD	AUTHORITY	DR.	CK.

DO NOT SCALE REPORT ERRORS
TOLERANCES UNLESS OTHERWISE SPECIFIED
± . ALLOWED ON TWO PLACE DECIMALS
± .010 ALLOWED ON THREE PLACE DECIMALS
COMMERCIAL TOLERANCES APPLY TO STANDARD PARTS - ROLLED SECTIONS - SHEET METAL GAGES - DRILLED AND PUNCHED HOLES.
BURR ALL DRILLED HOLES. COUNTERSINK ALL TAPPED HOLES .030 X 90°

DWG. DATE 2-21-67	SCALE	DR. P. Plamondon	
FIRST USED		CK. R. Hansen	
		APPR.	
REFERENCE 1968		APPR.	
		APPR.	
MATERIAL SPEC.			
NAME CHART - ENGINE IDENTIFICATION			
PART NO. 1385004 SHEET 3 of 5		PAGE NO. 6-2.3	

1385004 Sheet 3 of 5

118

V4 P17525

BUICK

DAVE GRAHAM INC. - 2015
ALL RIGHTS RESERVED

BUICK MOTOR DIVISION
GENERAL MOTORS CORPORATION
FLINT, MICH., U. S. A.

FORM 000-A-1 OZALID 000-000 3M 3-60

1968 ENGINE IDENTIFICATION CHART - 4 MV 430 CUBIC INCH
ALL ENGINES ASSEMBLED IN FACTORY #36

ENGINE PREFIX	MFG. CODE	PART NUMBER	COMP RATIO EXP	COMP RATIO HI	TRANSMISSION MAN.	TRANSMISSION AUTO.	AIR COND.	WILDCAT	ELECTRA	RIVIERA
PD	RA	1395921		X		X		X	X	
PD	RB	1395922		X		X	X	X	X	
PE	RC	1395923	X			X		X	X	
PE	RD	1395924	X			X	X	X	X	
PD	RE	1395981		X	X			X		
PD	RF	1395982		X	X		X	X		
PD	RG	1395986		X		X				X
PD	RH	1395987		X		X	X			X
PE	RJ	1395988	X			X				X
PE	RK	1395989	X			X	X			X

1385004
Sheet 4 of 5

119

DATE	SYM.	REVISION RECORD	AUTHORITY	DR.	CK.

DO NOT SCALE — REPORT ERRORS
TOLERANCES UNLESS OTHERWISE SPECIFIED
±. ALLOWED ON TWO PLACE DECIMALS
±.010 ALLOWED ON THREE PLACE DECIMALS
COMMERCIAL TOLERANCES APPLY TO STANDARD PARTS - ROLLED SECTIONS - SHEET METAL GAGES - DRILLED AND PUNCHED HOLES.
BURR ALL DRILLED HOLES. COUNTERSINK ALL TAPPED HOLES .030 X 90°

DWG. DATE 2-21-67 | SCALE | DR. P. Plamondon
FIRST USED 1968 | CK R. Hanner
APPR.
REFERENCE | APPR.
APPR.
MATERIAL SPEC.
NAME CHART - ENGINE IDENTIFICATION
PART NO. 1385004 | PAGE NO. 6-2.4
SHEET 4 of 5

BUICK

VQ P17 S25

DAVE GRAHAM INC. - 2015
ALL RIGHTS RESERVED

1968 VENDEE ENGINE IDENTIFICATION CHART

DISPLACEMENT (CU. IN.)	ENG. CODE NO PREFIX	MANUF CODE	PART NUMBER	COMP RATIO EXP STD HI	CARBURETORS 2 BBL. 4 MV..
350				X	X
350				X	X

KAISER JEEP - MANUAL

KAISER JEEP - AUTOMATIC

1385004 Sheet 5 of 5

120

DATE	SYM.	REVISION RECORD	AUTHORITY	DR.	CK.

GENERAL MOTORS CORPORATION
FLINT, MICH., U.S.A.

DO NOT SCALE — REPORT ERRORS

TOLERANCES UNLESS OTHERWISE SPECIFIED

± . ALLOWED ON TWO PLACE DECIMALS

± .010 ALLOWED ON THREE PLACE DECIMALS

COMMERCIAL TOLERANCES APPLY TO STANDARD PARTS - ROLLED SECTIONS - SHEET METAL GAGES - DRILLED AND PUNCHED HOLES.

BURR ALL DRILLED HOLES. COUNTERSINK ALL TAPPED HOLES .030 X 90°

ENG. DATE 2-21-67	SCALE	DR. P. Plamondon
FIRST USED 1968		CK R. Haller
REFERENCE		APPR.
		APPR.
		APPR.

MATERIAL SPEC.

NAME: CHART - ENGINE IDENTIFICATION

PART NO. 1385004 SHEET 5 of 5

PAGE NO. 6-2.5

BUICK

DAVE GRAHAM INC. - 2015
ALL RIGHTS RESERVED

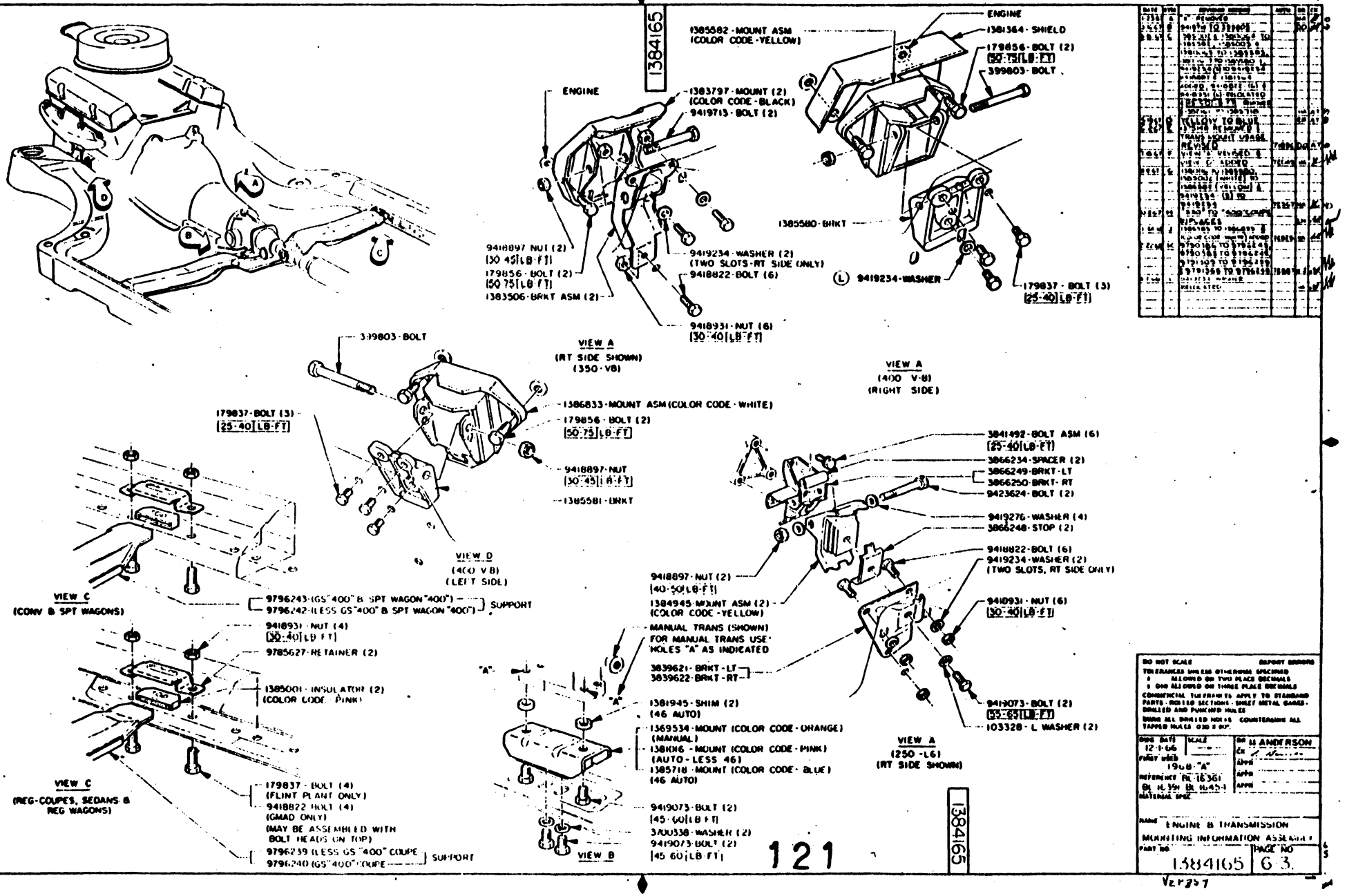

DAVE GRAHAM INC. - 2015
ALL RIGHTS RESERVED

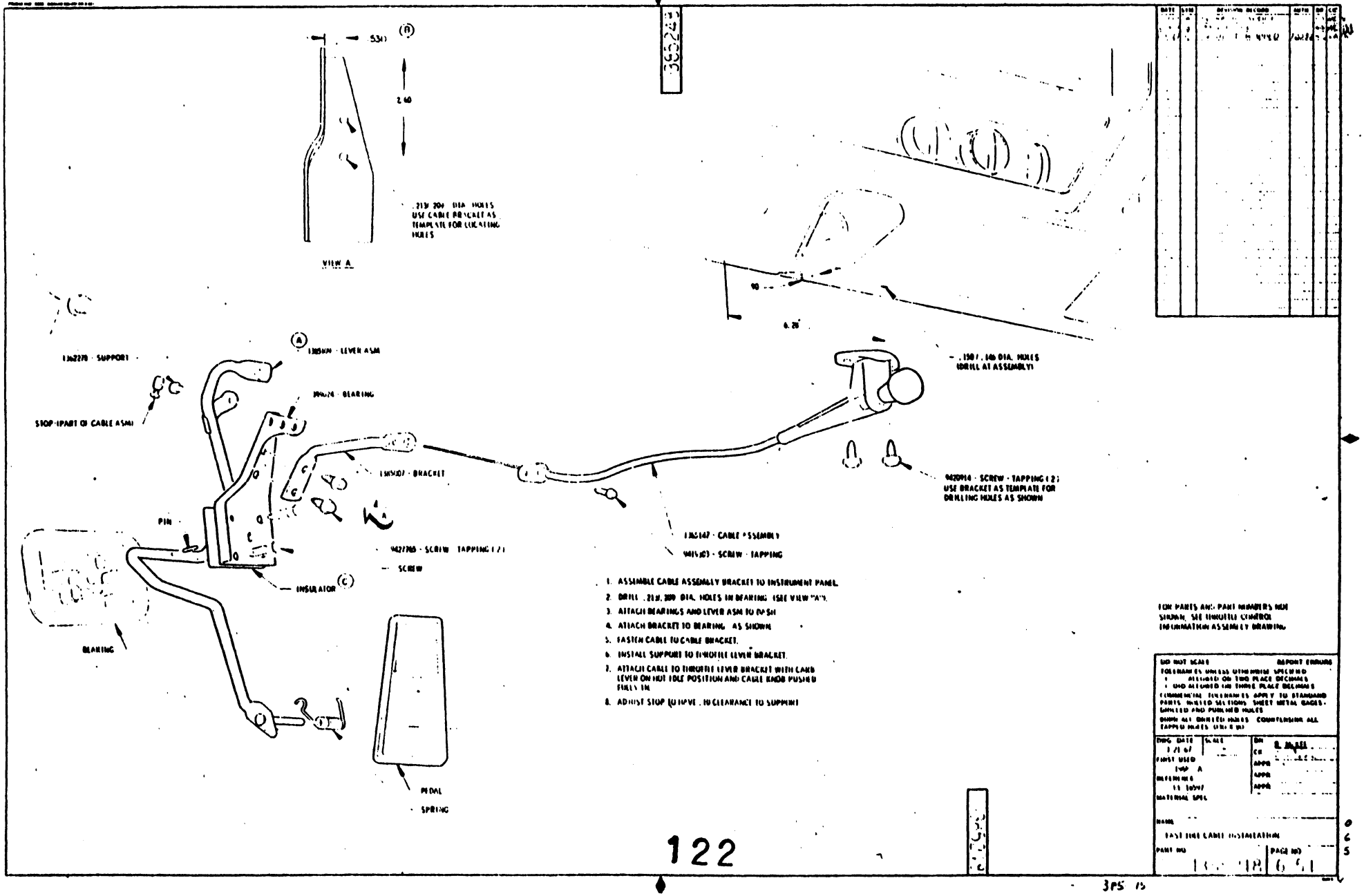

DAVE GRAHAM INC. - 2015
ALL RIGHTS RESERVED

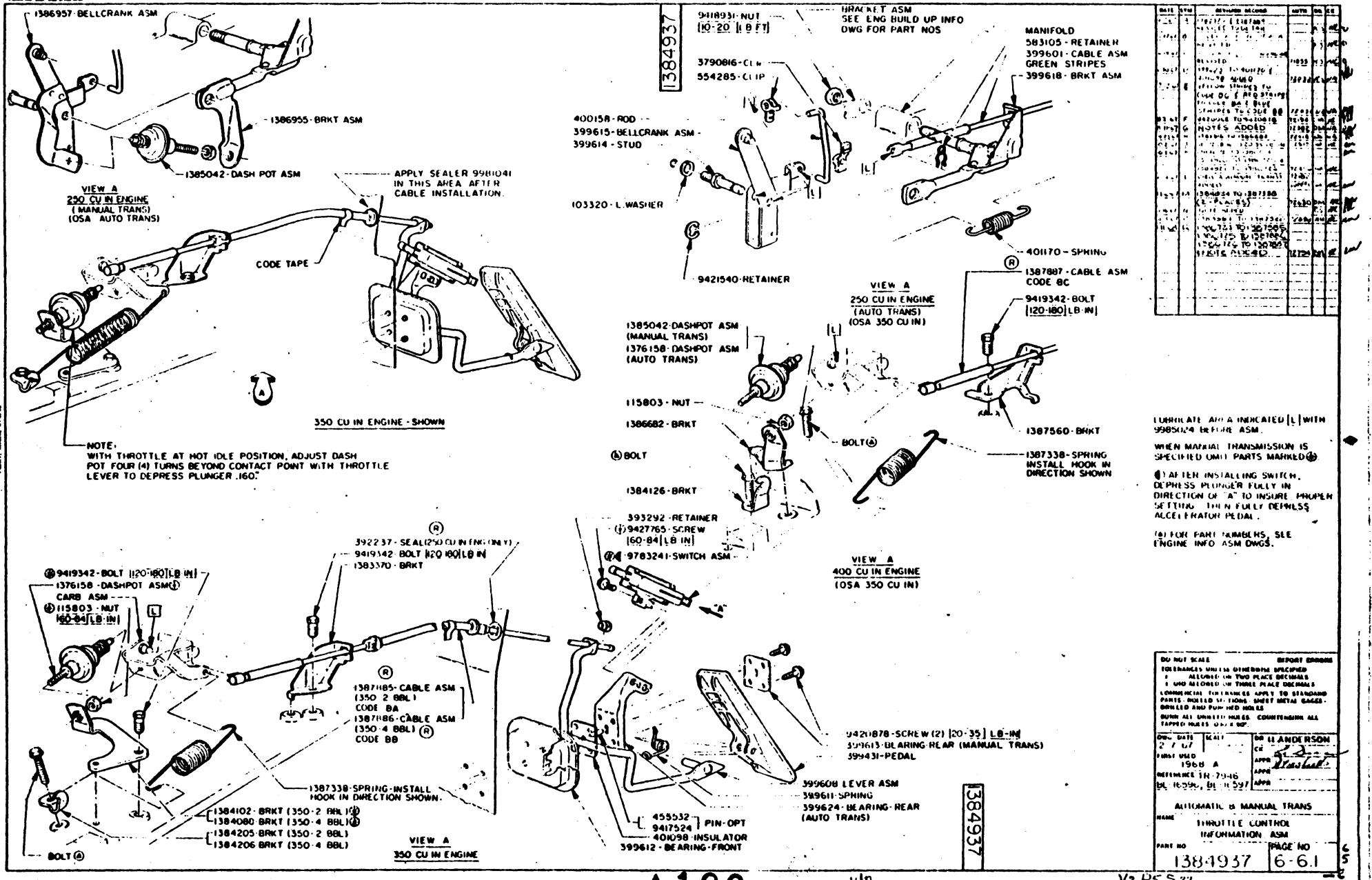

V2 P5 S27

DAVE GRAHAM INC. - 2015
ALL RIGHTS RESERVED

DAVE GRAHAM INC. - 2015
ALL RIGHTS RESERVED

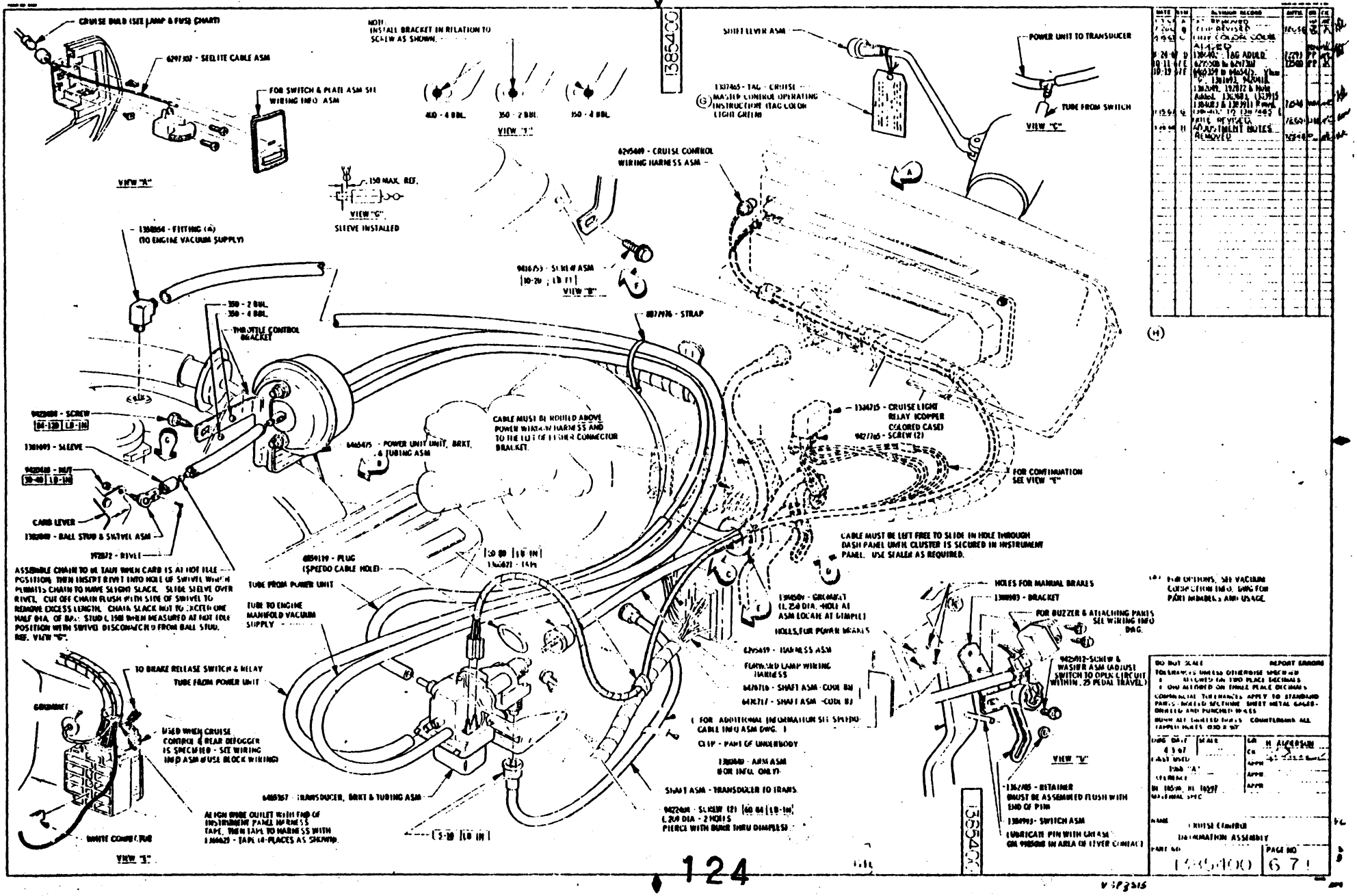

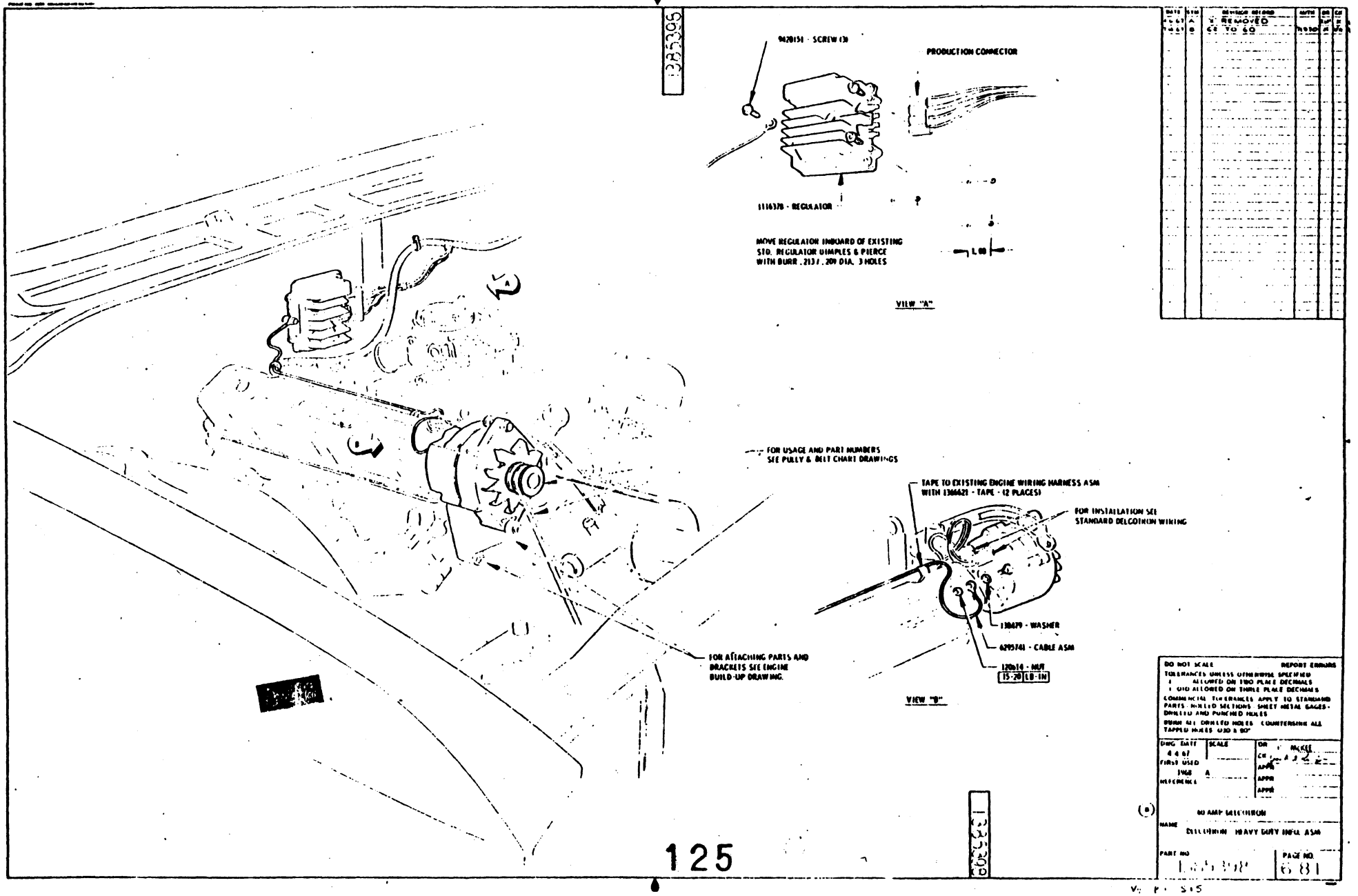

BUICK MOTOR DIVISION
GENERAL MOTORS CORPORATION
FLINT, MICH. U.S.A.
DAVE GRAHAM INC. - 2015
ALL RIGHTS RESERVED

DAVE GRAHAM INC. - 2015
ALL RIGHTS RESERVED

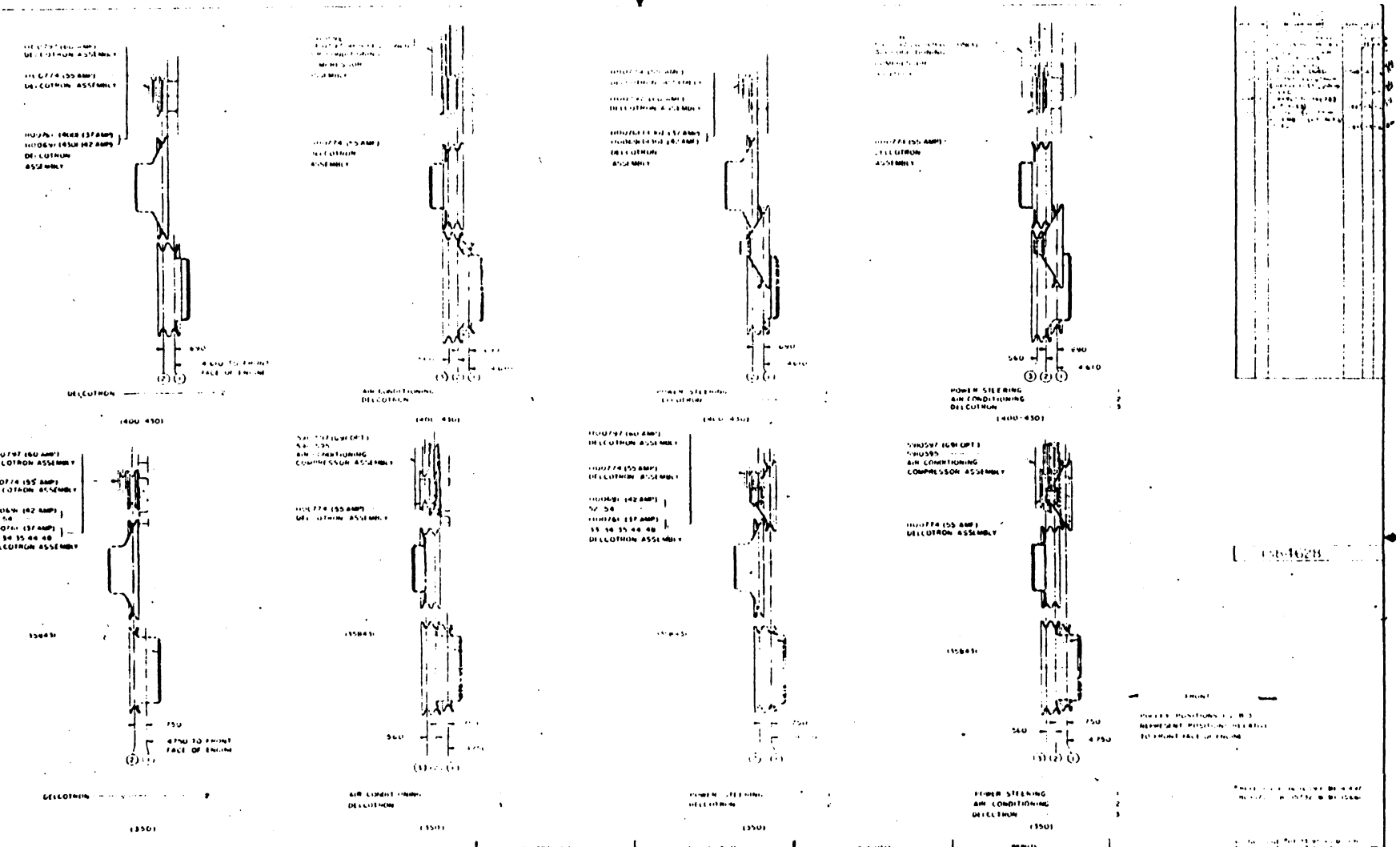

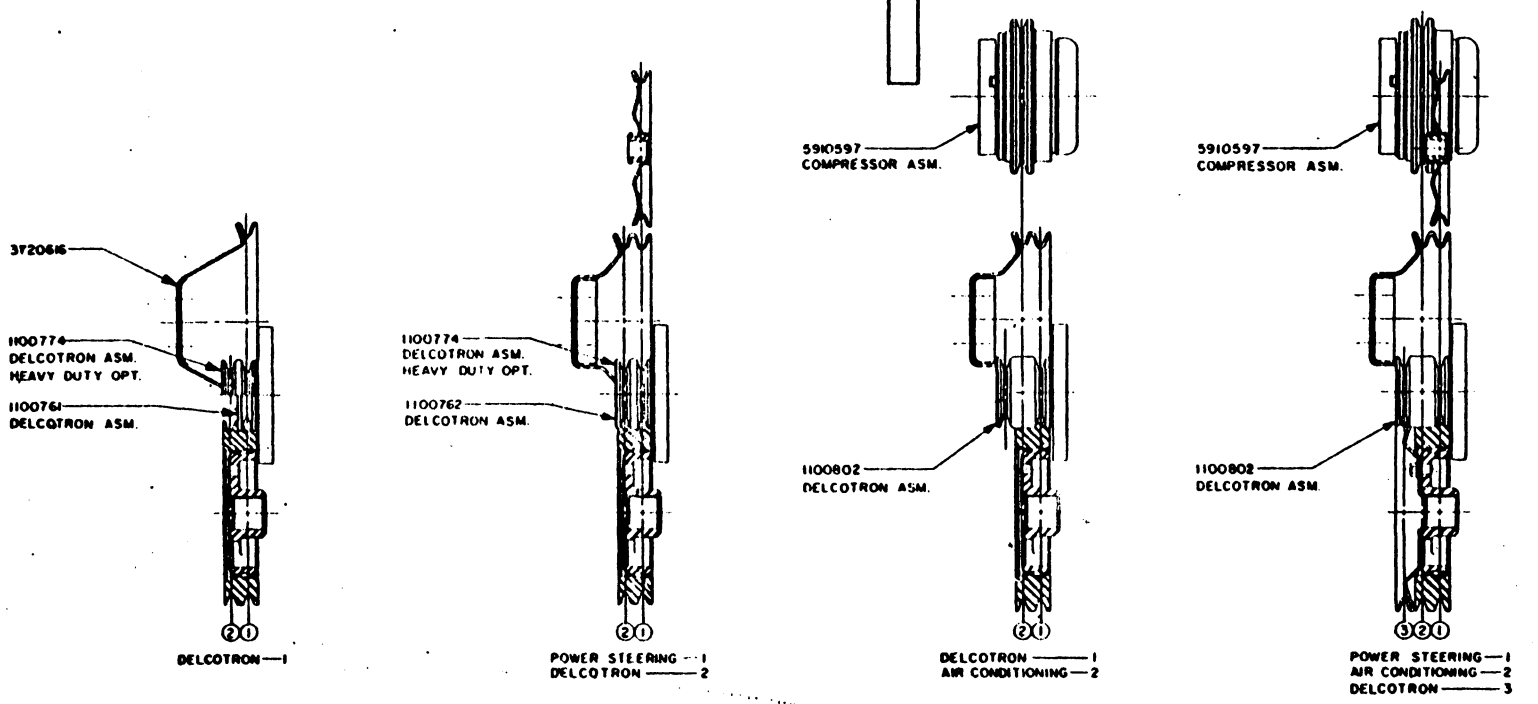

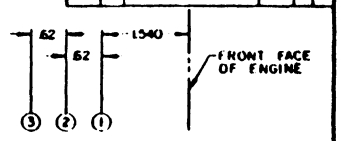

PULLEY POSITIONS 1,2 & 3 REPRESENT POSITIONS RELATIVE TO FRONT FACE OF ENGINE.

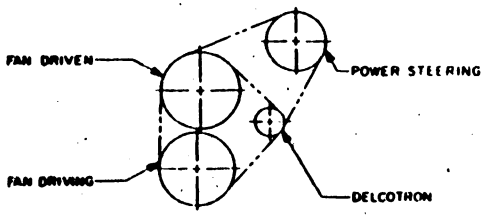

REGULAR & REGULAR WITH POWER STEERING

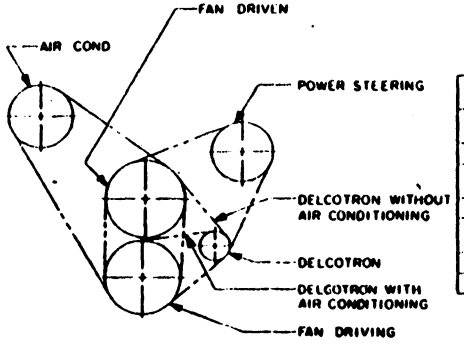

AIR CONDITIONING & AIR CONDITIONING WITH POWER STEERING

	PULLEYS				BELTS			
	REGULAR		AIR CONDITIONING		REGULAR		AIR CONDITIONING	
	PART NO.	GAGE DIA.	PART NO.	GAGE DIA.	PART NO.	CODE	PART NO.	CODE
CRANKSHAFT	PART OF ENG. ASM.	6.64	PART OF ENG. ASM.	7.18	—	—	—	—
CRANKSHAFT WITH POWER STEERING	PART OF ENG. ASM.	6.64	3876872	7.18	—	—	—	—
FAN DRIVEN	3905945	7.80	3890419	6.19	—	—	—	—
FAN DRIVEN WITH POWER STEERING	3900434	7.80	3890419	6.19	—	—	—	—
DELCOTRON	—	2.50	—	2.50	3845644	TB	[illegible]	TI
DELCOTRON WITH POWER STEERING	—	2.50	—	2.50	3845644	TB	[illegible]	TU
POWER STEERING	3791943	5.60	3791943	5.60	3845648	WB	3845648	WB
AIR CONDITIONING	—	—	—	5.58	—	—	3847709	WI

USING GAGE BT-33-95-ACB, OR EQUIVALENT, BELT TENSION SHOULD BE
DELCOTRON — 110-125 LBS
POWER STEERING — 110-125 LBS.
AIR CONDITIONING — 135-150 LBS.

DO NOT SCALE — REPORT ERRORS
TOLERANCES UNLESS OTHERWISE SPECIFIED
± .02 ALL FIXED ON TWO PLACE DECIMALS
± .010 ALL FIXED ON THREE PLACE DECIMALS
COMMERCIAL TOLERANCES APPLY TO STANDARD PARTS BUILT SECTIONS - SHEET METAL GAGES - DRILLED AND PUNCHED HOLES
BURR ALL DRILLED HOLES COUNTERSINK ALL TAPPED HOLES .030 X 60°

DWG DATE 2-14-67 SCALE NONE
FIRST USED 1968
REFERENCE 8-6-5
G.W.O. 50-1060
DR. D. BEDFORD
CK
APPR
APPR
APPR

250 CU IN. ENGINE

NAME CHART PULLEYS & BELTS

PART NO. 138-1930 PAGE NO. 6-13.1

127

DAVE GRAHAM INC. - 2015
ALL RIGHTS RESERVED

DAVE GRAHAM INC. - 2015
ALL RIGHTS RESERVED

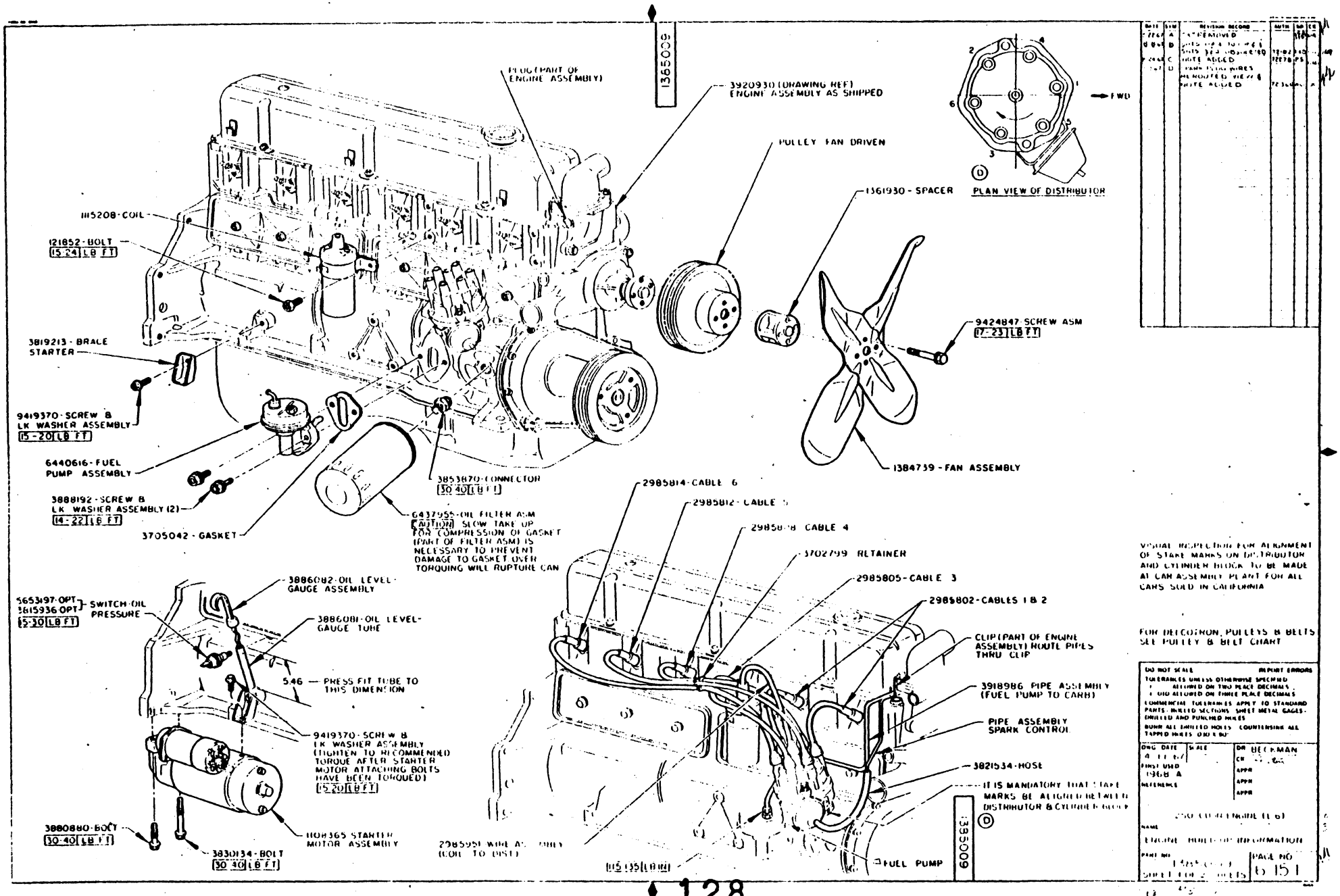

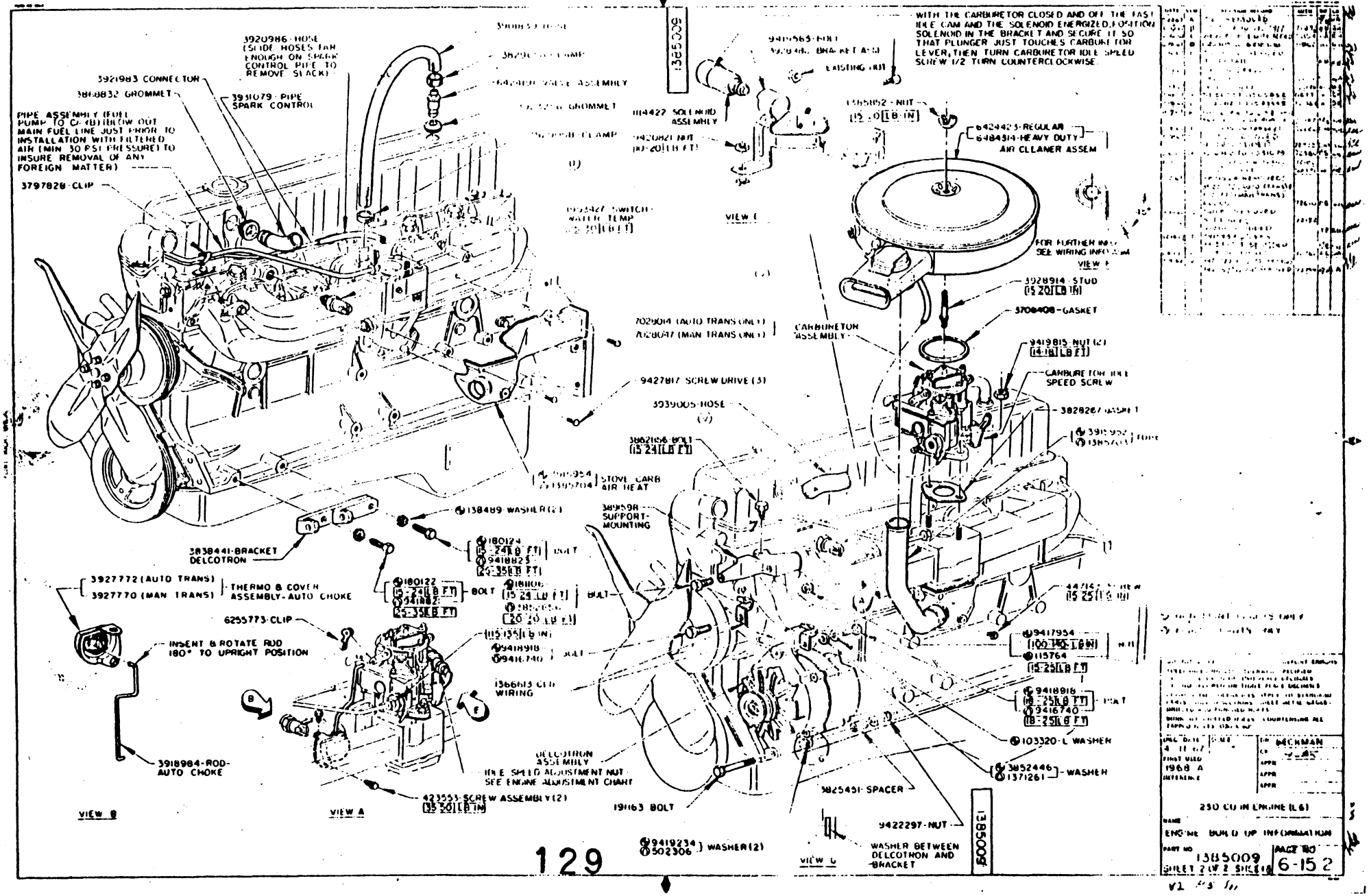

DAVE GRAHAM INC. - 2015
ALL RIGHTS RESERVED

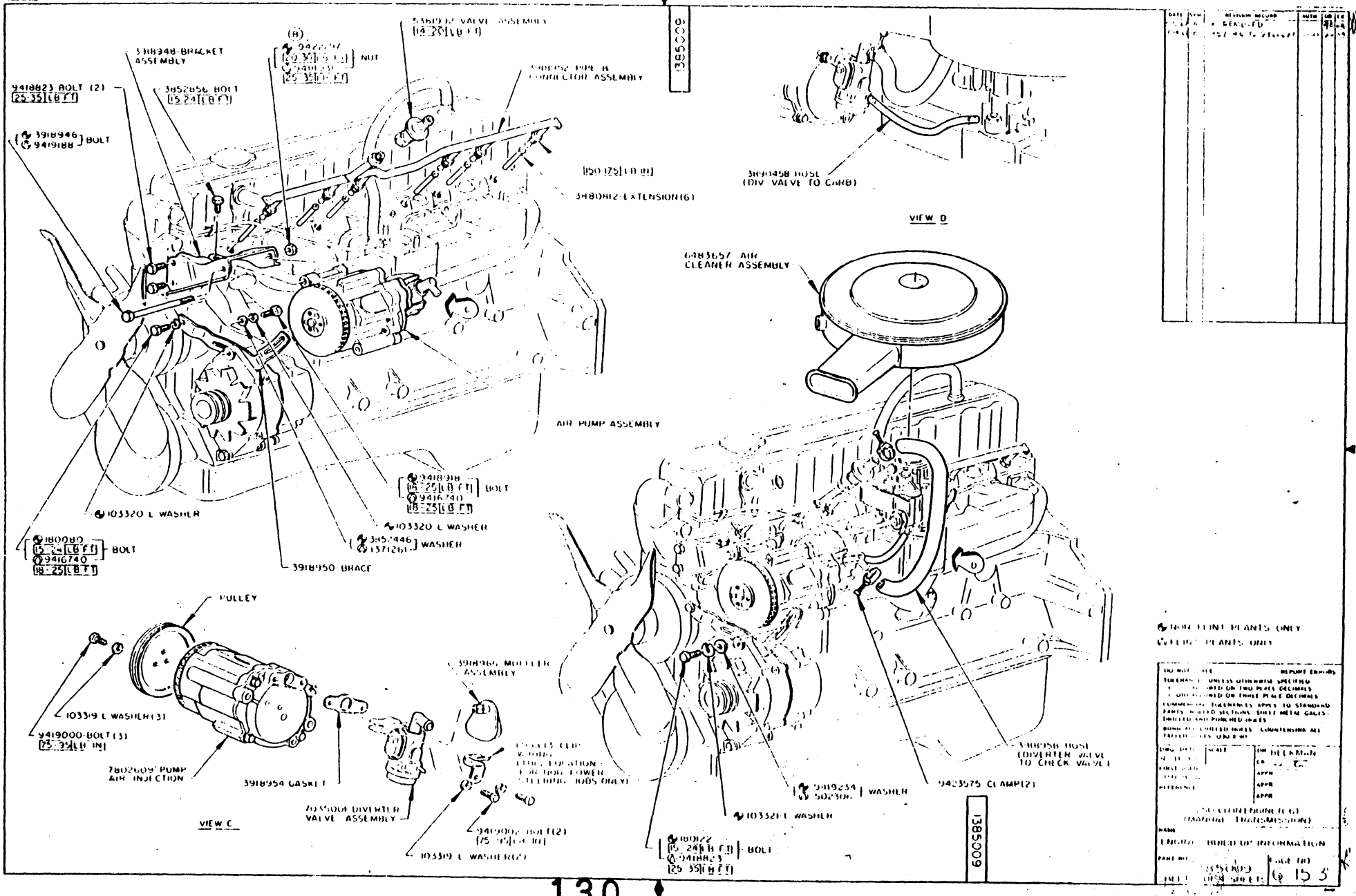
3385009
3918348 BRACKET ASSEMBLY
9418823 BOLT (2)
25-35 [LB FT]
3852856 BOLT
15-24 [LB FT]
(A)
NUT
3918946
9419188 BOLT
3918950 BRACE
AIR PUMP ASSEMBLY
3918938
9416740 BOLT
18-25 [LB FT]
103320 L WASHER
345446 WASHER
180080
9416740 BOLT
18-25 [LB FT]
PULLEY
103319 L WASHER (3)
9419000 BOLT (3)
25-35 [LB IN]
7802609 PUMP AIR INJECTION
3918954 GASKET
7855001 DIVERTER VALVE ASSEMBLY
VIEW C
3918956 MUFFLER ASSEMBLY
9419000 BOLT (2)
103319 L WASHER (2)
3880812 EXTENSION (6)
3890458 HOSE (DIV VALVE TO CARB)
VIEW D
6483657 AIR CLEANER ASSEMBLY
3890458 HOSE (DIVERTER VALVE TO CHECK VALVE)
9419234
502306 WASHER
9423575 CLAMP (2)
103321 L WASHER
180122
15-24 [LB FT]
941883
25-35 [LB FT] BOLT
1385009
DAVE GRAHAM INC. - 2015
ALL RIGHTS RESERVED

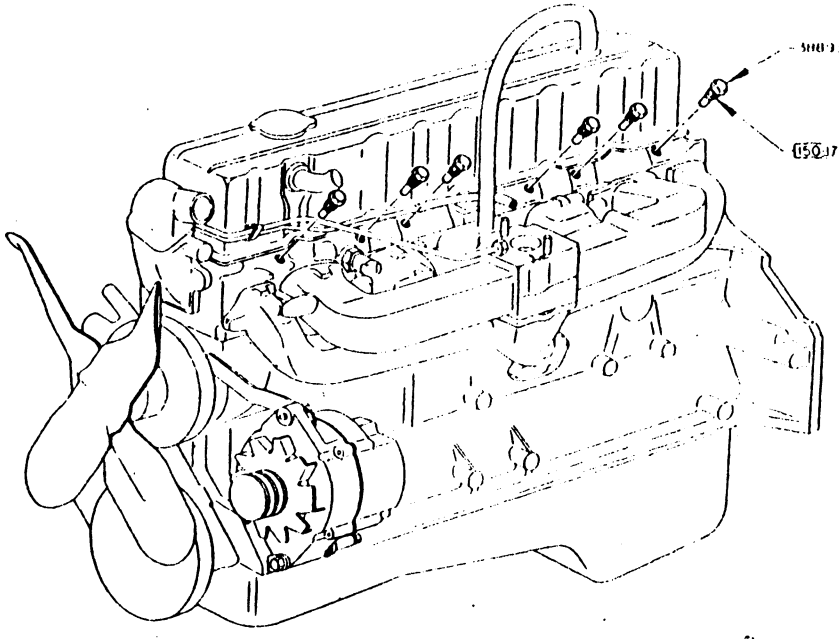

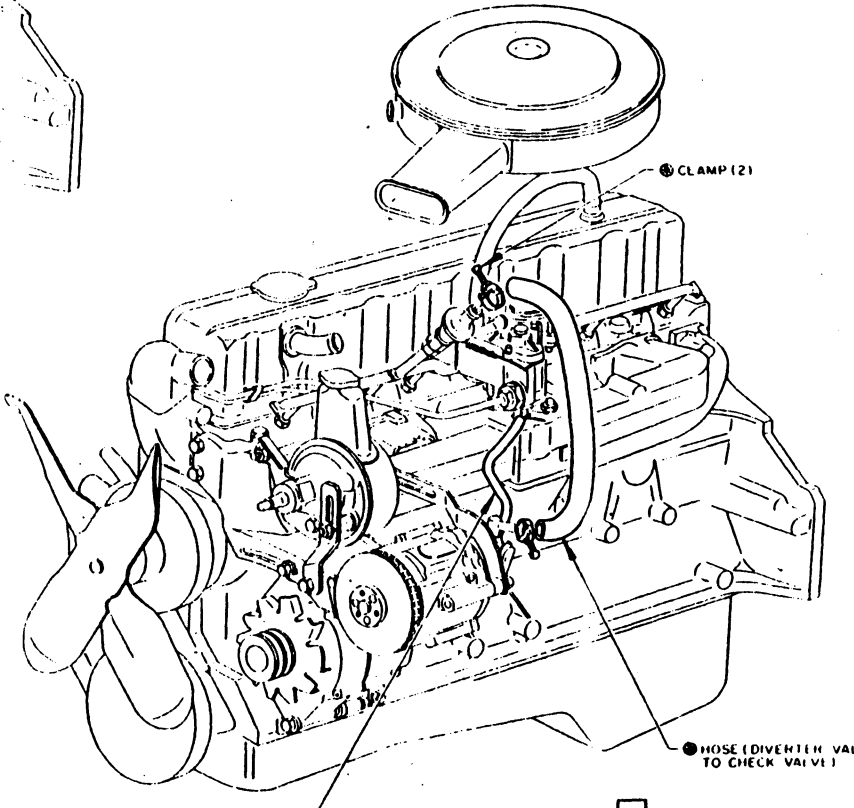

1385009

1385009

REMOVED

CLAMP AS AIR LESS POWER STEERING

DO NOT SCALE — REPORT ERRORS
TOLERANCES UNLESS OTHERWISE SPECIFIED
X ALLOWED ON TWO PLACE DECIMALS
X .010 ALLOWED ON THREE PLACE DECIMALS
COMMERCIAL TOLERANCES APPLY TO STAMPING PARTS, ROLLED SECTIONS, SHEET METAL GAGES, DRILLED AND PUNCHED HOLES
BURR SEE DRILLED HOLES COUNTERSINK ALL TAPPED HOLES 030 X 82°

DRG DATE 4-11-67 | SCALE | DR BECKMAN
FIRST USED 1968 A | CK | APPR | APPR | APPR
REFERENCE

(350 CU IN ENGINE (6) (MANUAL TRANSMISSION)

NAME
ENGINE BODY - TOP INFORMATION

PART NO 1385009 | PAGE NO 6.15.4
SHEET 1 OF 4 SHEETS

DAVE GRAHAM INC. - 2015
ALL RIGHTS RESERVED

DAVE GRAHAM INC. - 2015
ALL RIGHTS RESERVED

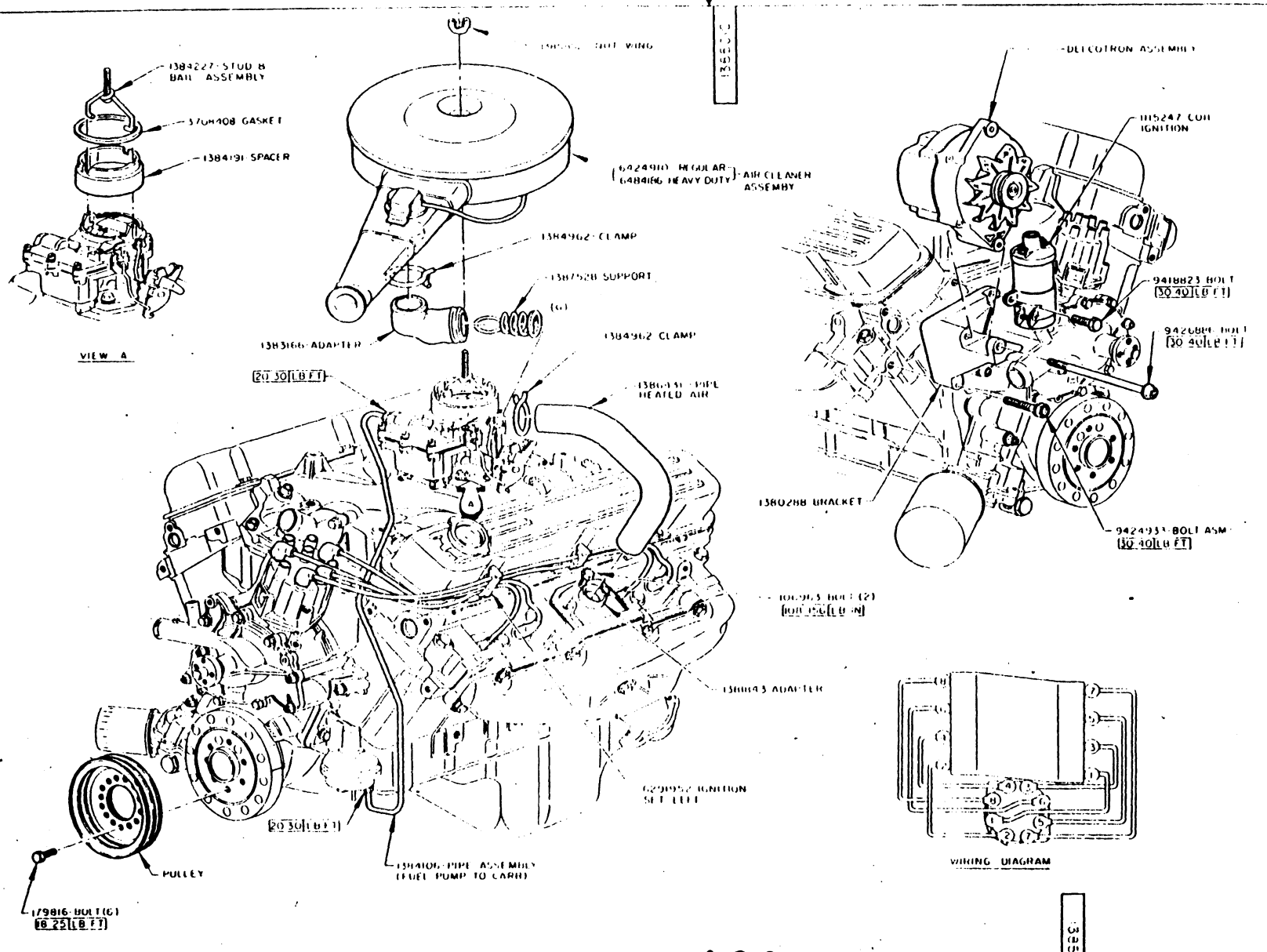

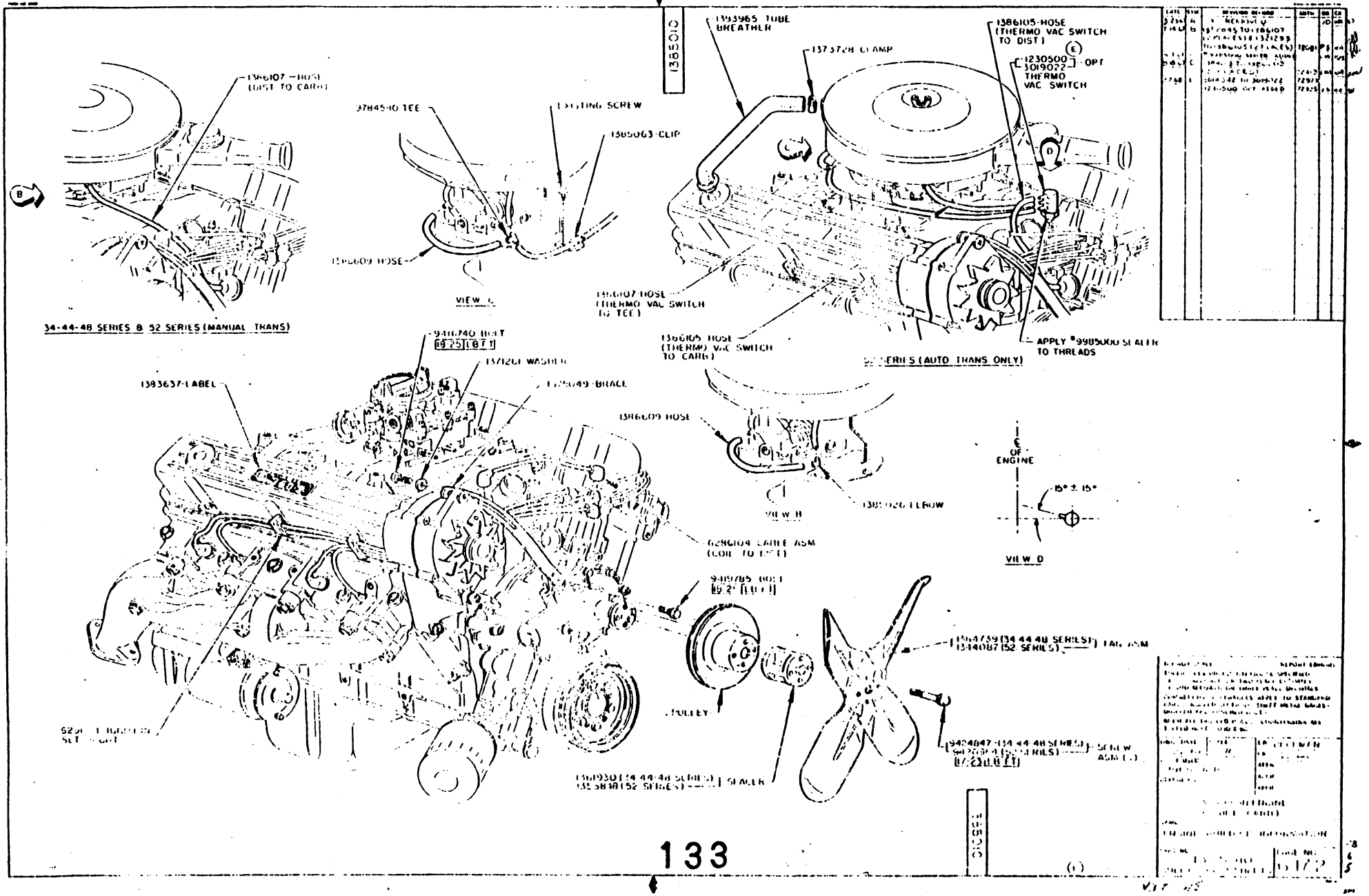

DAVE GRAHAM INC. - 2015
ALL RIGHTS RESERVED

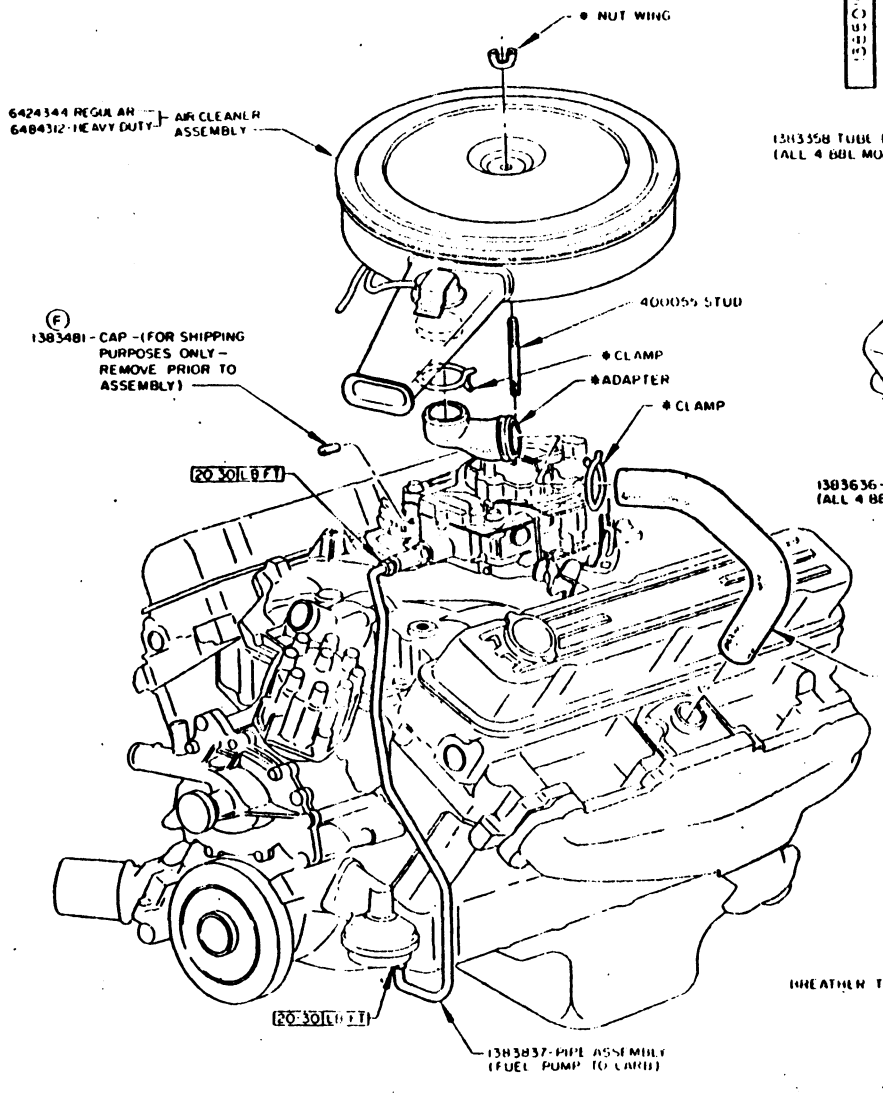

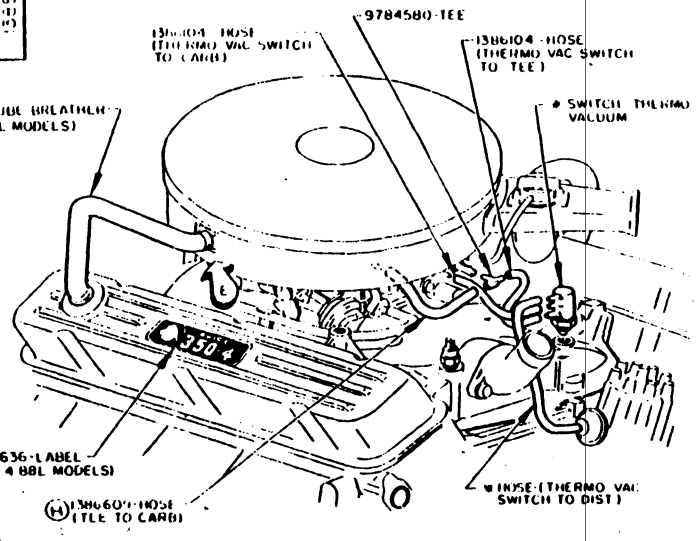

52 SERIES (AUTO TRANS ONLY)

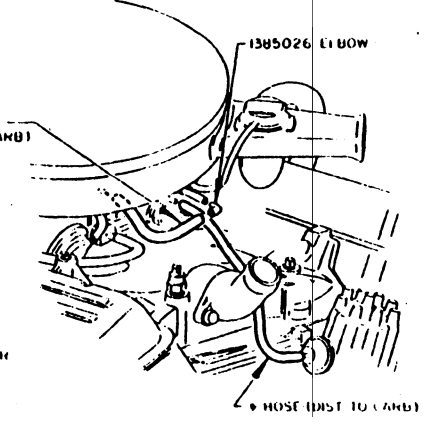

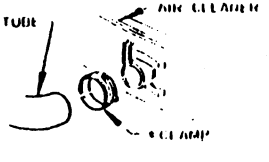

VIEW I

34 44 48 SERIES & 52 SERIES (MAN TRANS)

VISUAL INSP... FOR ALIGNMENT OF STAKE ... ON DISTRIBUTOR AND ENGINE FRONT COVER TO BE MADE AT ... ASSEMBLY PLANT FOR ALL CARS ... IN CALIFORNIA

* FOR PART NUMBERS SEE SHEET ... 2

DO NOT SCALE ... REPORT ERRORS
TOLERANCES ... UNLESS OTHERWISE SPECIFIED
... ONE PLACE DECIMALS ±
... TWO PLACE DECIMALS ±
... THREE PLACE DECIMALS ±
... ANGLES ±
... RULES APPLY TO STANDARD PRINTS, SHEET METAL GAUGES AND MATS
BURR ALL ... UNLESS COUNTERSUNK ALL TAPPED HOLES ...

DRAWN DATE ... BY BECKMAN
FIRST ISSUED ...
REFERENCE ...
CHECKED ...
APPR ...
APPR ...
APPR ...
NAME ...
PART NO. ...
PAGE NO. 6.17.5

DAVE GRAHAM INC. - 2015
ALL RIGHTS RESERVED

ENGINE TIMING AND IDLE LABEL CHART

LABEL NO.	CODE	USAGE
1387231	BA	350-4 and 430-4 Auto.
1387232	BB	350-4 and 350-2 Man.
1387233	BC	400 and 430 Man.
1387234	BD	400 Auto.
1387181	BE	350-2 Auto.
*1387677	BF	L-6 Man.
*3931958	CT	L-6 Auto.

*1-8-68
PART NUMBER- 1383770
PAGE NUMBER- 6-18.1

DB

DAVE GRAHAM INC. - 2015
ALL RIGHTS RESERVED

DAVE GRAHAM INC. - 2015
ALL RIGHTS RESERVED

1385972

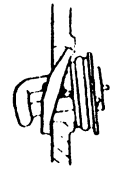

INSTALLING POSITION

1386059 OPT 3401215 — HEATER ASSEMBLY

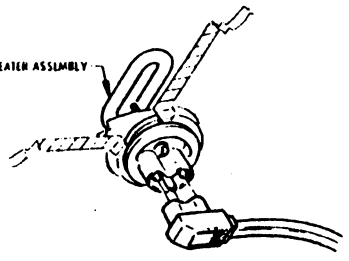

VIEW "A"

DATE	STM	REVISION RECORD	AUTH	EB	CK
7-15-68	A	RELEASED		AC	MA

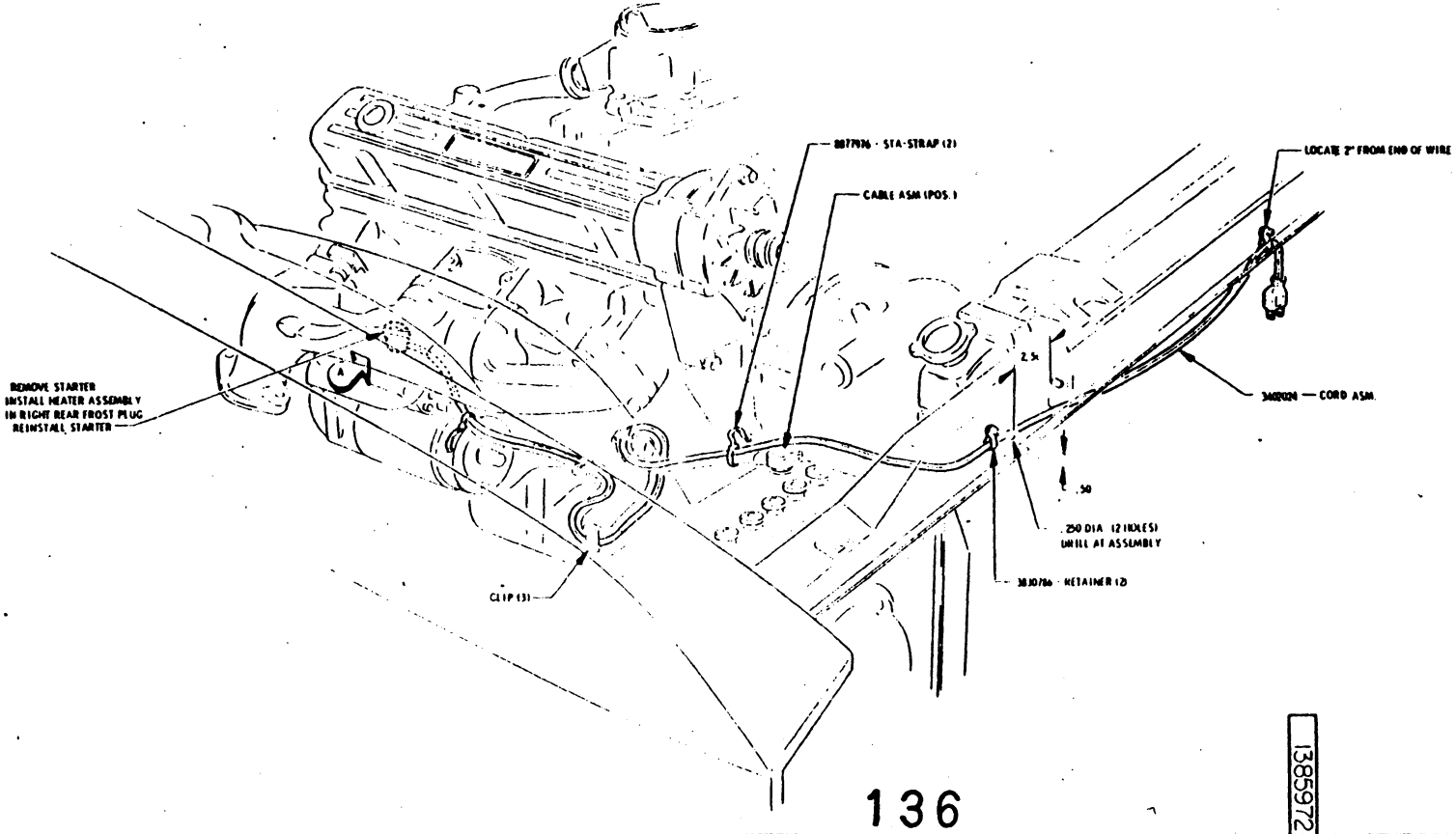

REMOVE FROST PLUG CAREFULLY (DO NOT SCORE THE MACHINED SURFACE OF HOLE).

THOROUGHLY CLEAN FROST PLUG HOLE REMOVING ANY BURRS, COMPOUND, PAINT OR ROUGH SPOTS.

APPLY A COATING OF GREASE TO THE "O" RING AND MACHINED SURFACE OF HOLE.

DO NOT SCALE — REPORT ERRORS

TOLERANCES UNLESS OTHERWISE SPECIFIED
X ALLOWED ON TWO PLACE DECIMALS
X.XXX ALLOWED ON THREE PLACE DECIMALS
COMMERCIAL TOLERANCES APPLY TO STANDARD PARTS, ROLLED SECTIONS, SHEET METAL GAGES, DRILLED AND PUNCHED HOLES
BURR ALL DRILLED HOLES. COUNTERSINK ALL TAPPED HOLES .030 X 90°

DWG DATE	SCALE	DR B. MEADE
6-9-67	1-1	CK [illegible]
FIRST USED		APPR
1968 "A"		APPR
REFERENCE		APPR

MATERIAL SPEC

NAME
ENGINE BLOCK HEATER INFORMATION ASSEMBLY

PART NO	PAGE NO
1385972	6-19.1

1385972

V3 PS 572

DAVE GRAHAM INC. - 2015
ALL RIGHTS RESERVED

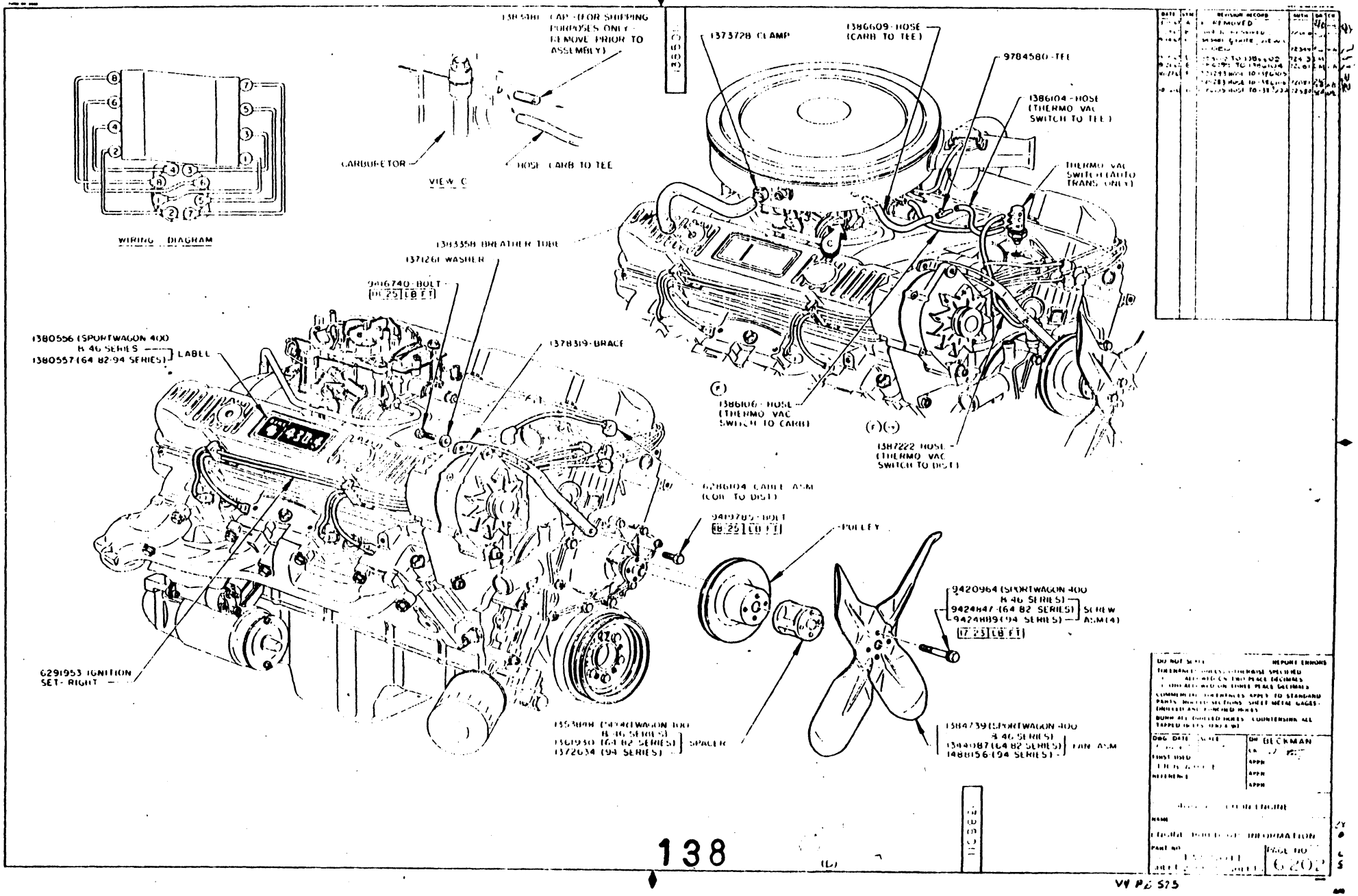

DAVE GRAHAM INC. - 2015
ALL RIGHTS RESERVED

	PAGES
Transmission Identification and Usage Chart	7-1.2
Transmission Lower Controls 3 Speed Manual - Installation See 9-3.1 for Upper Controls	7-2.1
Transmission Lower Controls Automatic - Installation See 9-4.1 for Upper Controls	7-3.1
Transmission Controls 3 Speed Floor Shift	7-4.1
Transmission Controls (Manual) 4 Speed Floor Shift - 446 G.S.	7-5.1
Transmission Controls - Automatic Console Shift. Installations and Adjustments.	7-6.1
Transmission Oil Cooler Pipe Lines Installation - 2 Speed Automatic ST-300	7-7.1
Clutch Pedal and Controls Installation - All	7-8.1
Clutch - Information Assembly V-8 - 350	7-10.1
Clutch - Information Assembly 446 - G.S.	7-11.1
Transmission Oil Filler and Vacuum Modulator Pipe Installation 2-Spd. ST-300	7-12.1
Transmission Oil Filler and Vacuum Modulator Pipes 3 Sp. Auto ST-400 Trans. Installations	7-13.1
Transmission & Clutch - Housing Mounting Information Assembly Automatic & Manual	7-14.1

Revised 8-1-67
PART NUMBER- 1383770
PAGE NUMBER- 7-1.0

DAVE GRAHAM INC. - 2015
ALL RIGHTS RESERVED

SPECIAL - SKYLARK 43000 - 44000 SERIES

1968 TRANSMISSION IDENTIFICATION AND USAGE CHART

	TRANS.	PART NO.	SHOWN ON	MAN. CODE	SPECIAL & SKYLARK L-6	SPECIAL & SKYLARK 350 V-8 2BBL	SPECIAL & SKYLARK 350 V-8 4BBL	SPORTWAGON 350 V-8 2BBL	SPORTWAGON 350 V-8 4BBL	400 V-8	G.S. 400 V-8
	3 SPD. MAN.	3919349	3915070	QP	X						
	3 SPD. MAN.	3919355	3915070	RJ		X	X	X	X		
	3 SPD. MAN.	9793425	9781076	DB			X				X
	4 SPD. MAN.	3915083	3869918	HE		X	X				X
*	2 SPD. AUTO.	1383319	1383665	LC	X						
	2 SPD. AUTO.	1384947	1383665	ME		X	X				
	2 SPD. AUTO.	1383488	1383665	MH				X	X		
	3 SPD. AUTO.	8625805	8625686	BA							X
	3 SPD. AUTO.	8625795	8625686	BW						X	

Revised 8-1-67

* ECR 72087

PART NUMBER- 1383770

PAGE NUMBER- 7-1.2

DAVE GRAHAM INC. - 2015
ALL RIGHTS RESERVED

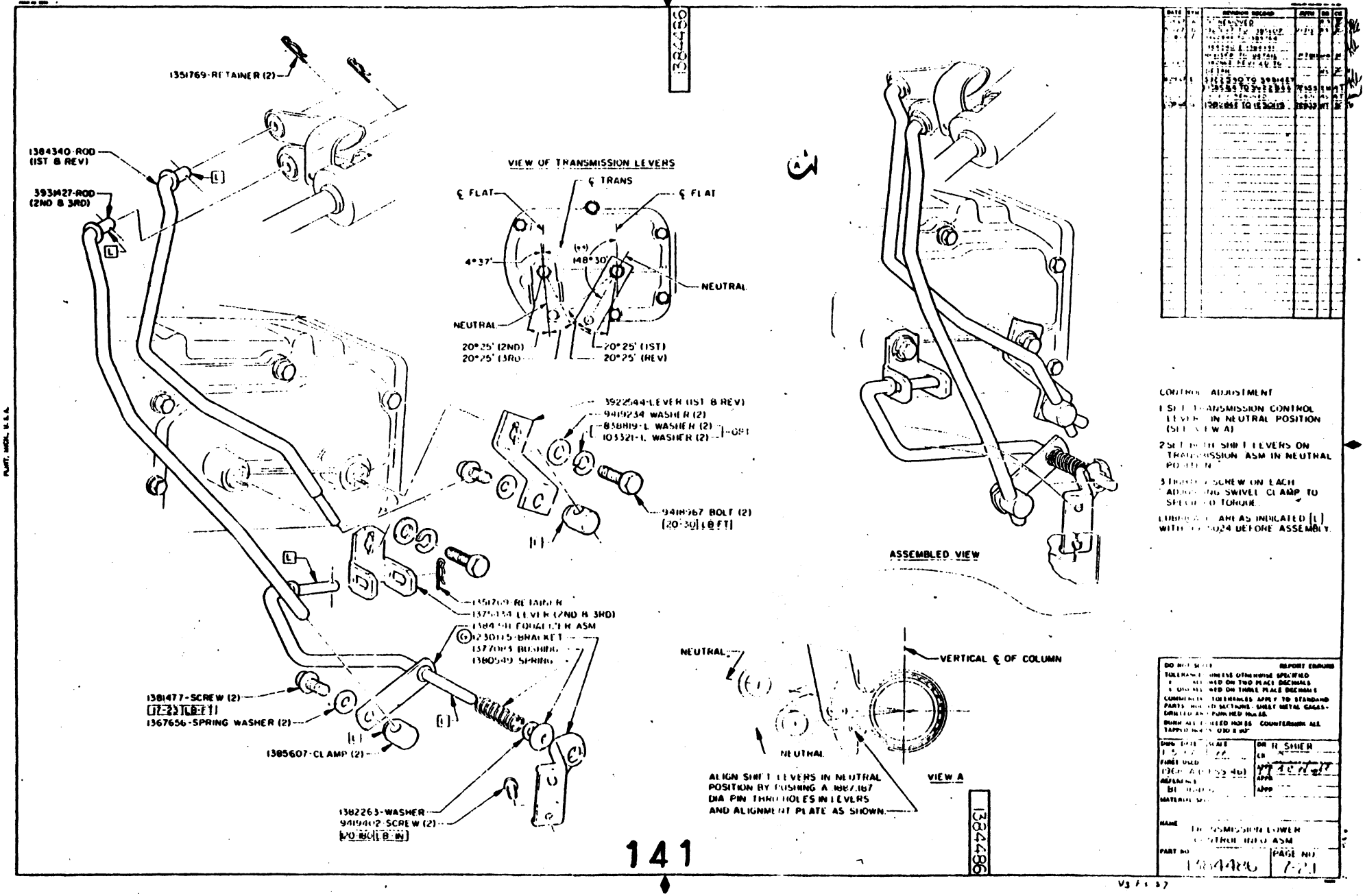

DAVE GRAHAM INC. - 2015
ALL RIGHTS RESERVED

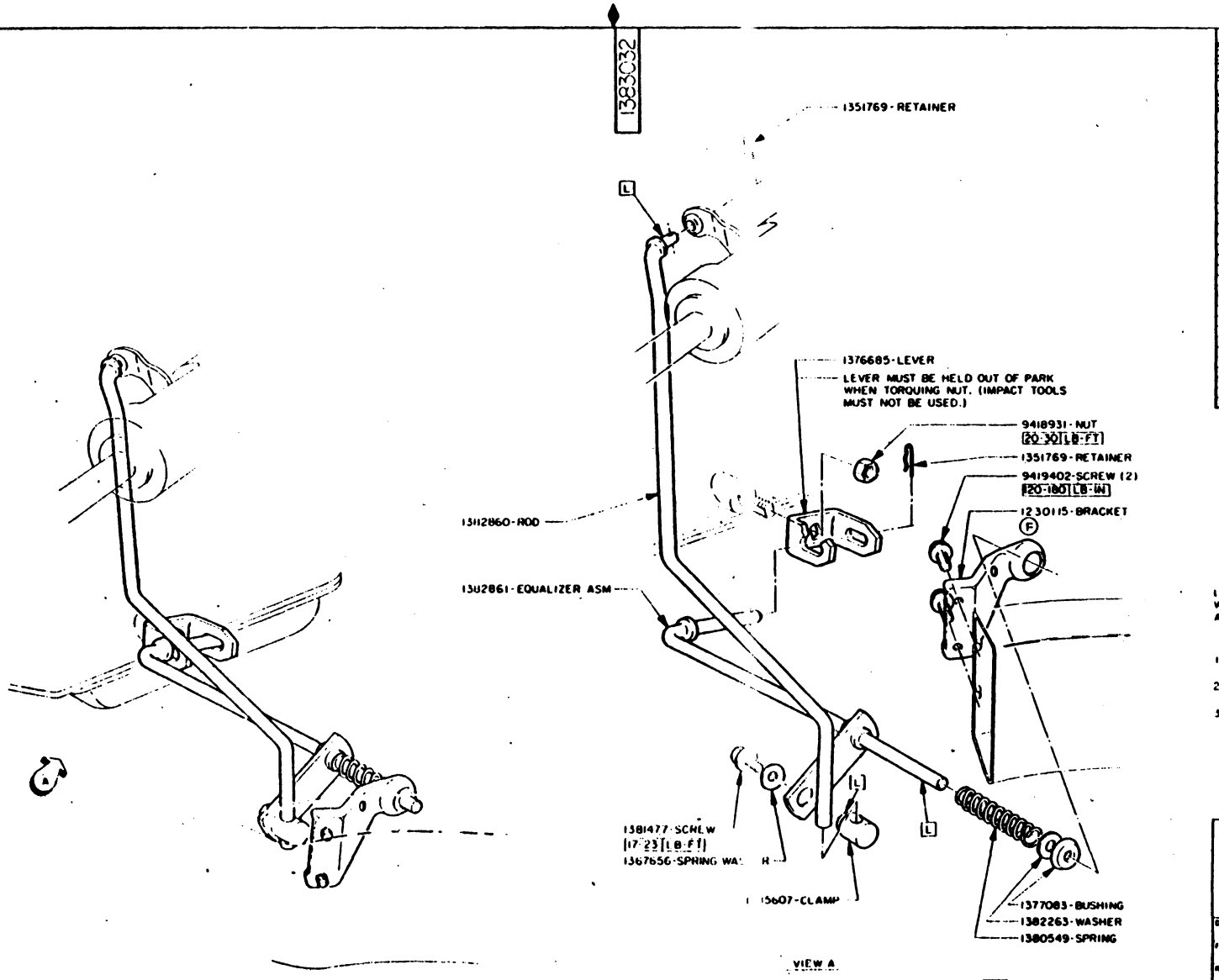

LUBRICATE AREAS INDICATED [L] WITH 9918 024 BEFORE ASSEMBLY

CONTROL ADJUSTMENT

1. SET TRANSMISSION SELECTOR LEVER IN DRIVE DETENT
2. SET STEERING COLUMN SHIFT LEVER AGAINST DRIVE STOP.
3. TIGHTEN SCREW IN CLAMP TO SPECIFIED TORQUE.

DO NOT SCALE — REPORT ERRORS

TOLERANCES UNLESS OTHERWISE SPECIFIED
± ALLOWED ON TWO PLACE DECIMALS
± .010 ALLOWED ON THREE PLACE DECIMALS

COMMERCIAL TOLERANCES APPLY TO STANDARD PARTS - ROLLED SECTIONS - SHEET METAL GAGES - DRILLED AND PUNCHED HOLES

BURR ALL DRILLED HOLES. COUNTERSINK ALL TAPPED HOLES .030 X 60°

DWG DATE 9 9 66	SCALE —	DR H. ANDERSON
FIRST USED 1968 A		CK
REFERENCE BC-16457		APPD
		APPD

AUTOMATIC

NAME TRANSMISSION LOWER CONTROL INFORMATION ASSEMBLY

PART NO 1383032 — PAGE NO. 7-31

DAVE GRAHAM INC. - 2015
ALL RIGHTS RESERVED

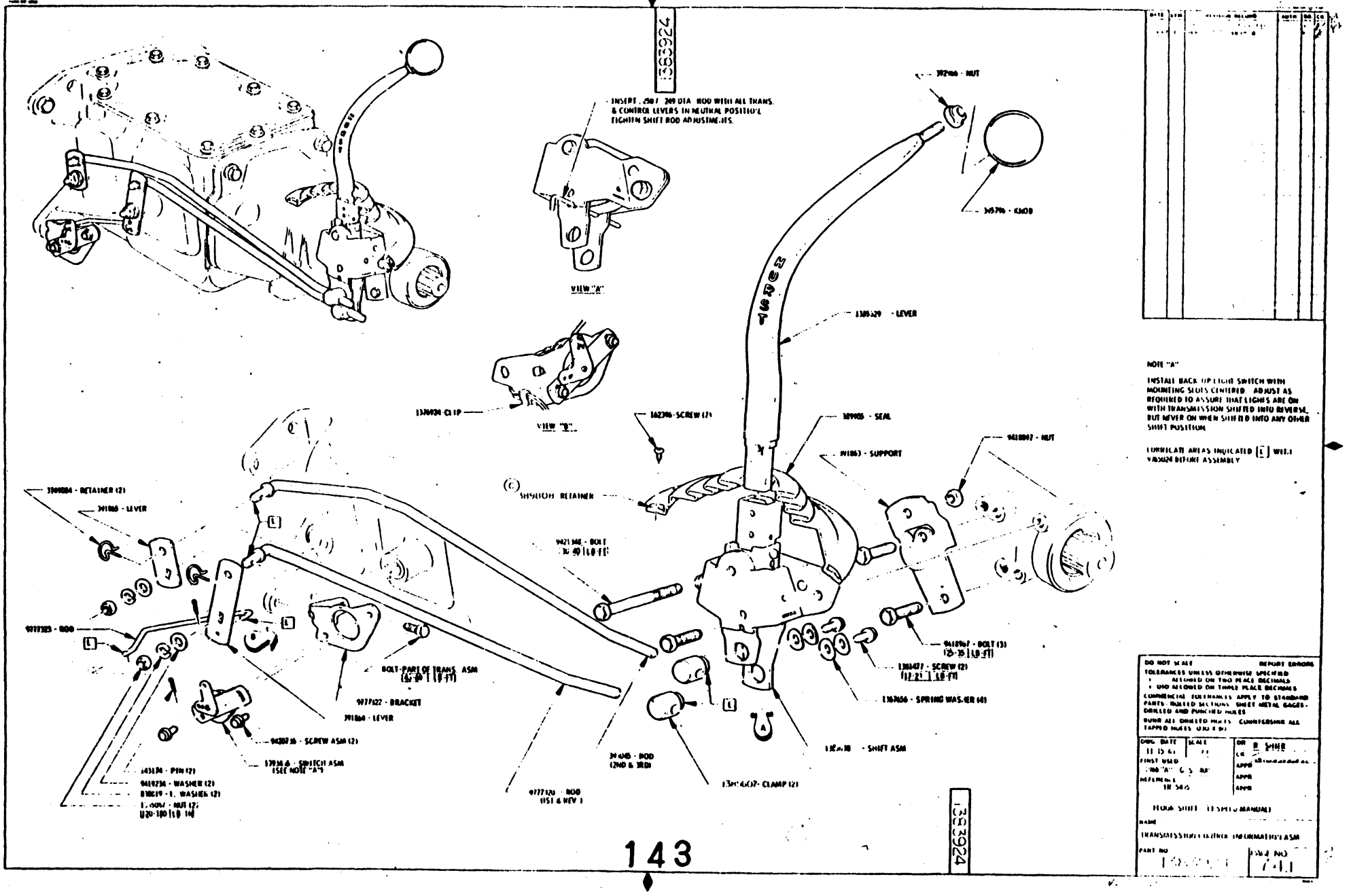

DAVE GRAHAM INC. - 2015
ALL RIGHTS RESERVED

DAVE GRAHAM INC. - 2015
ALL RIGHTS RESERVED

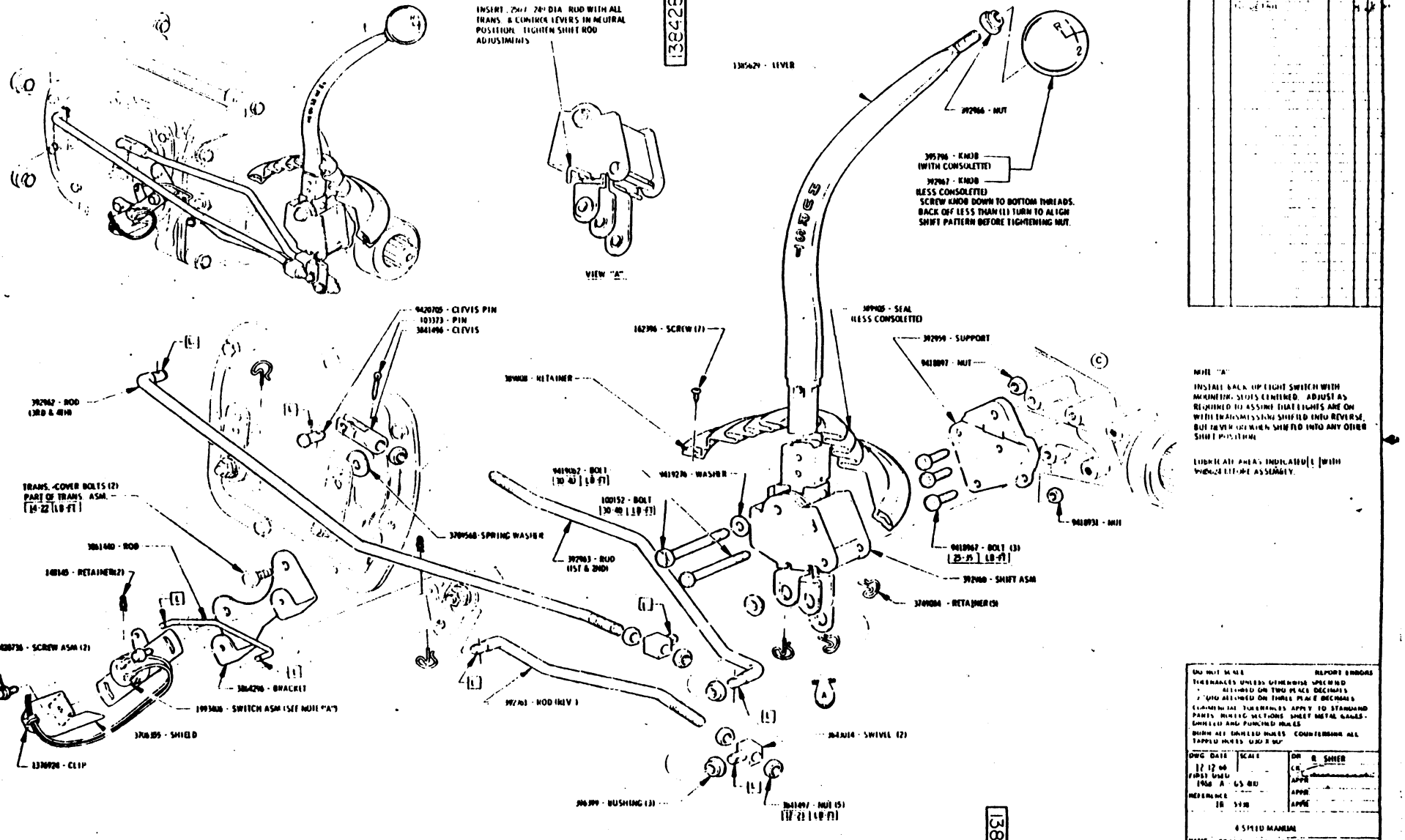

1384284

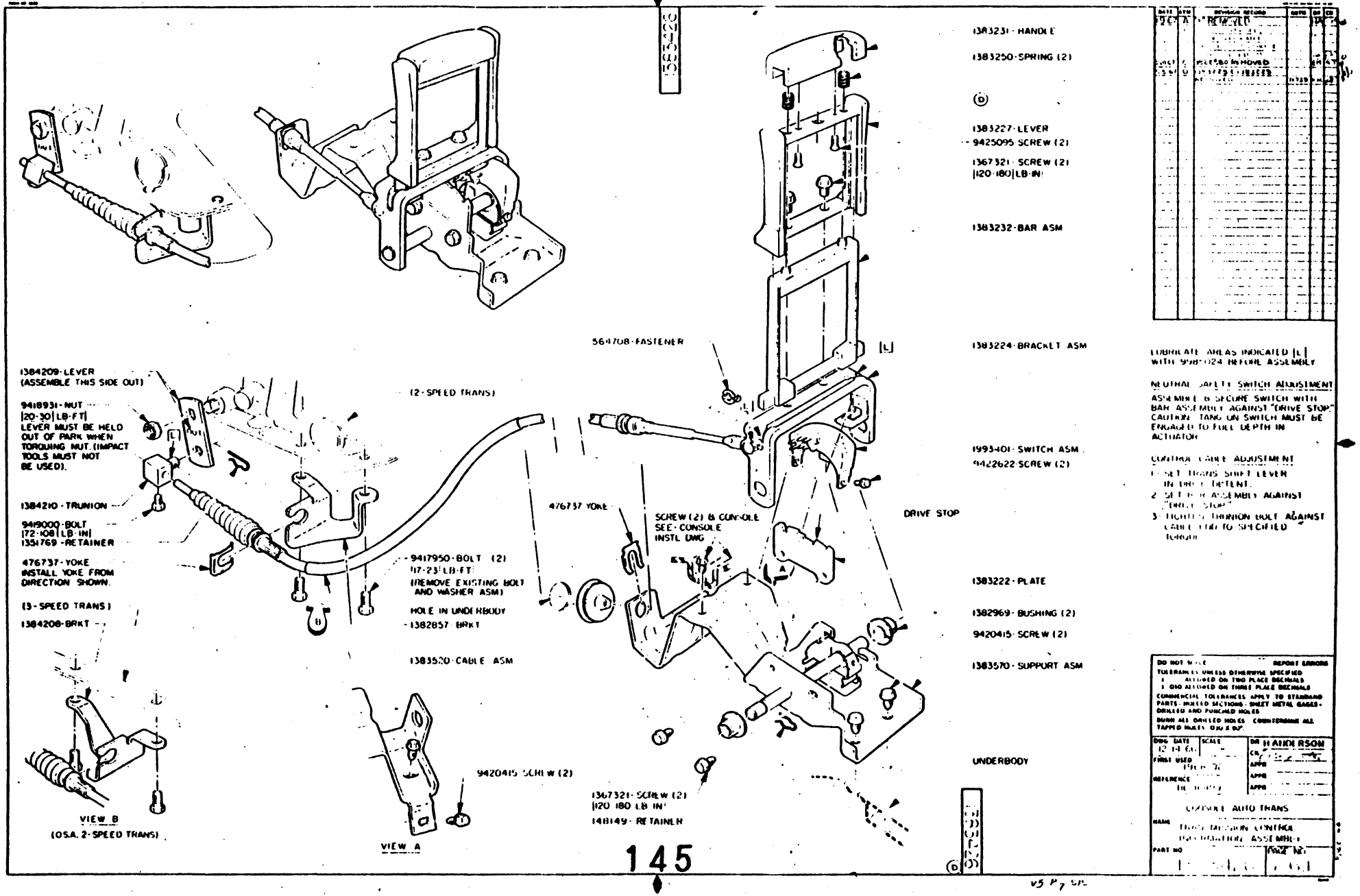

145

DAVE GRAHAM INC. - 2015
ALL RIGHTS RESERVED

DAVE GRAHAM INC. - 2015
ALL RIGHTS RESERVED

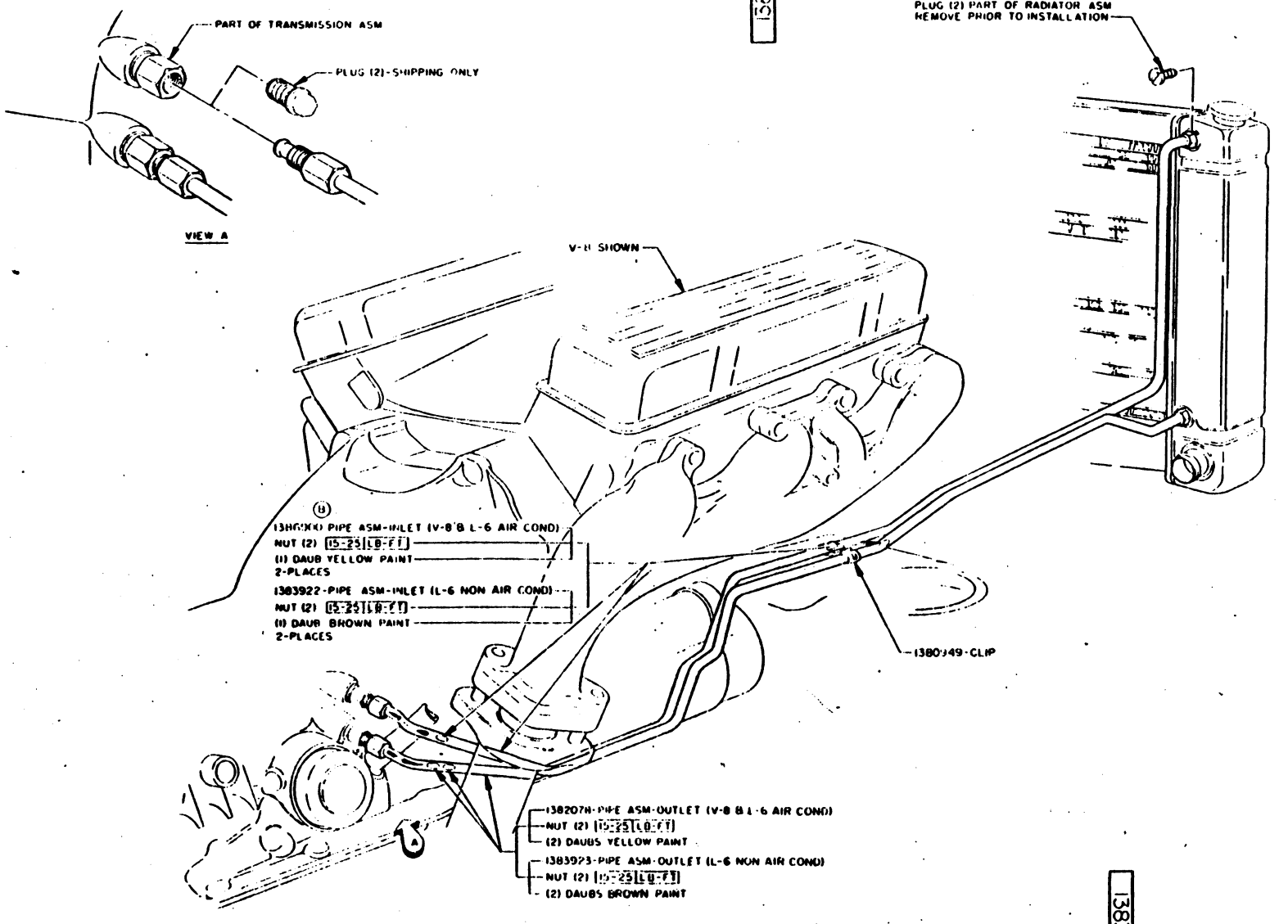

ALL LINE CONNECTIONS MUST BE FREE OF LEAKS UNDER OPERATING CONDITIONS

LINES MUST NOT CONTACT CHASSIS COMPONENTS

DO NOT SCALE — REPORT ERRORS
TOLERANCES UNLESS OTHERWISE SPECIFIED
± ALLOWED ON TWO PLACE DECIMALS
± .010 ALLOWED ON THREE PLACE DECIMALS
COMMERCIAL TOLERANCES APPLY TO STANDARD PARTS-ROLLED SECTIONS SHEET METAL GAGES-DRILLED AND PUNCHED HOLES
DEBUR ALL DRILLED HOLES COUNTERSINK ALL TAPPED HOLES .030 X 90°

DWG DATE 9-22-66	SCALE	DR R. SHIER
FIRST USED 1968 A		CK
REFERENCE		APPR
		APPR
		APPR

L-6 & V-8

NAME TRANSMISSION OIL COOLER PIPES INFORMATION ASSEMBLY

PART NO 1383209 — PAGE NO. 7-7.1

1383209

1383209

BUICK MOTOR DIVISION
GENERAL MOTORS CORPORATION
FLINT, MICH., U.S.A.

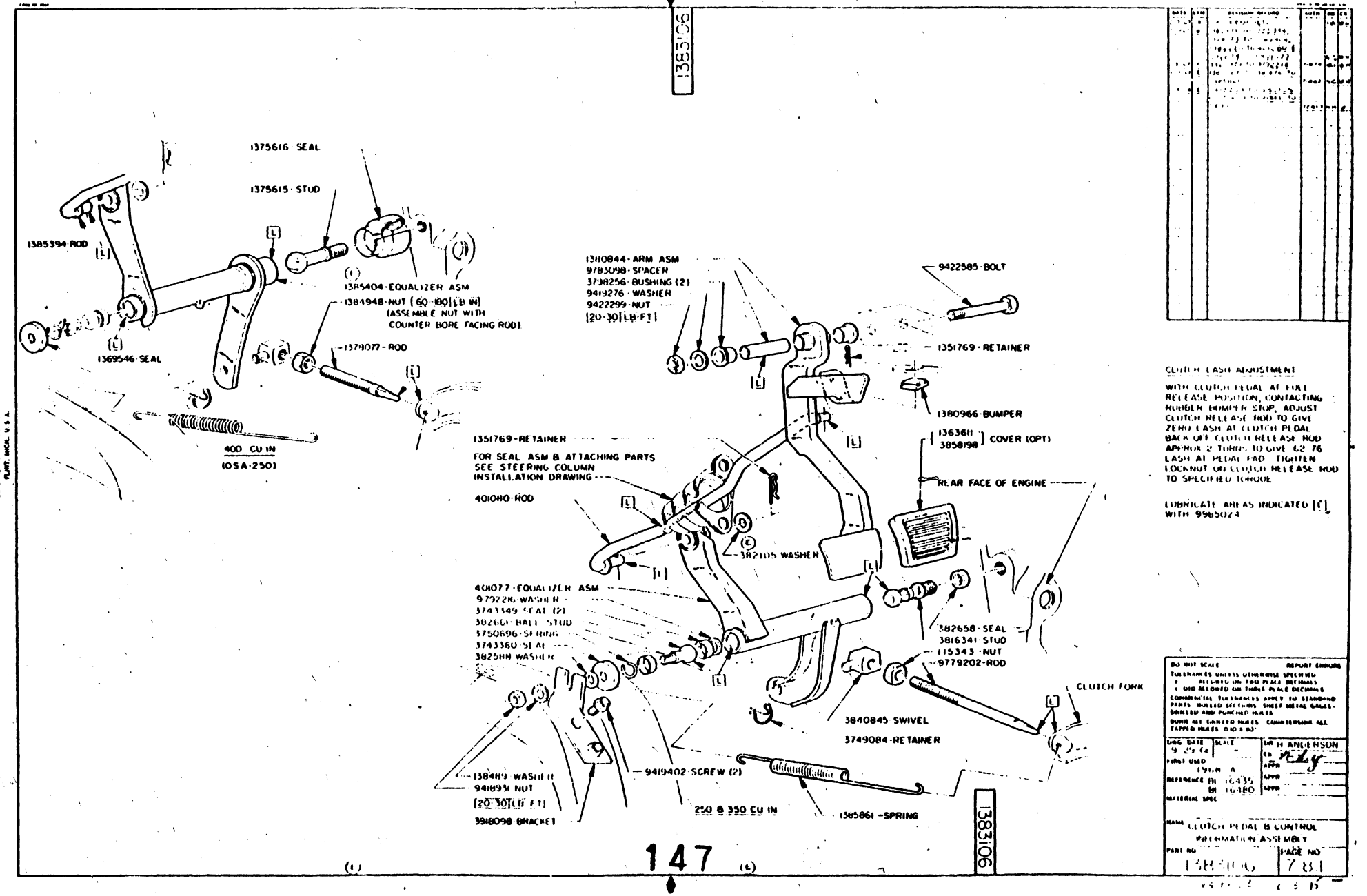

BUICK MOTOR DIVISION
GENERAL MOTORS CORPORATION
FLINT, MICH. U.S.A.

DAVE GRAHAM INC. - 2015
ALL RIGHTS RESERVED

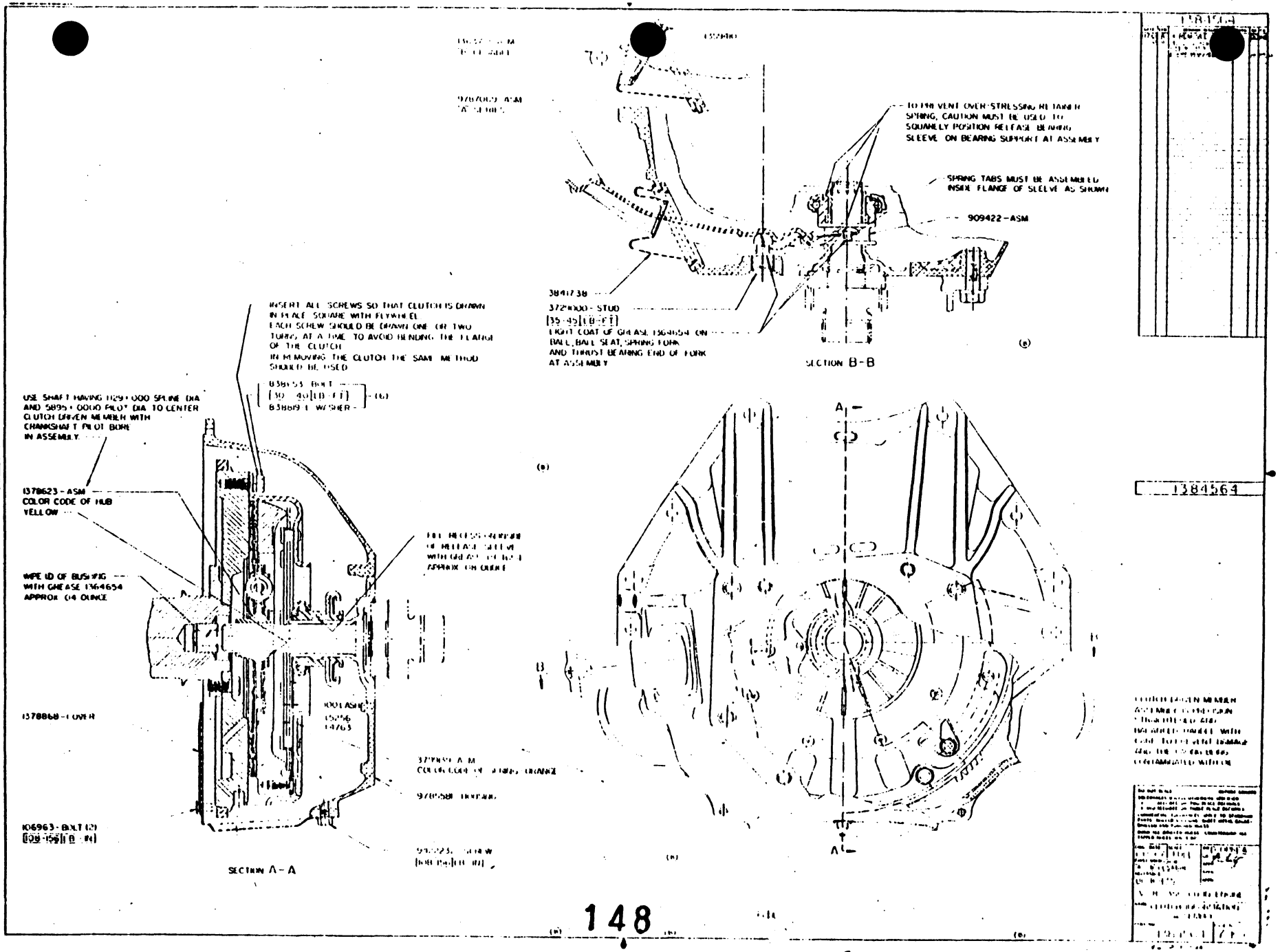

DAVE GRAHAM INC. - 2015
ALL RIGHTS RESERVED

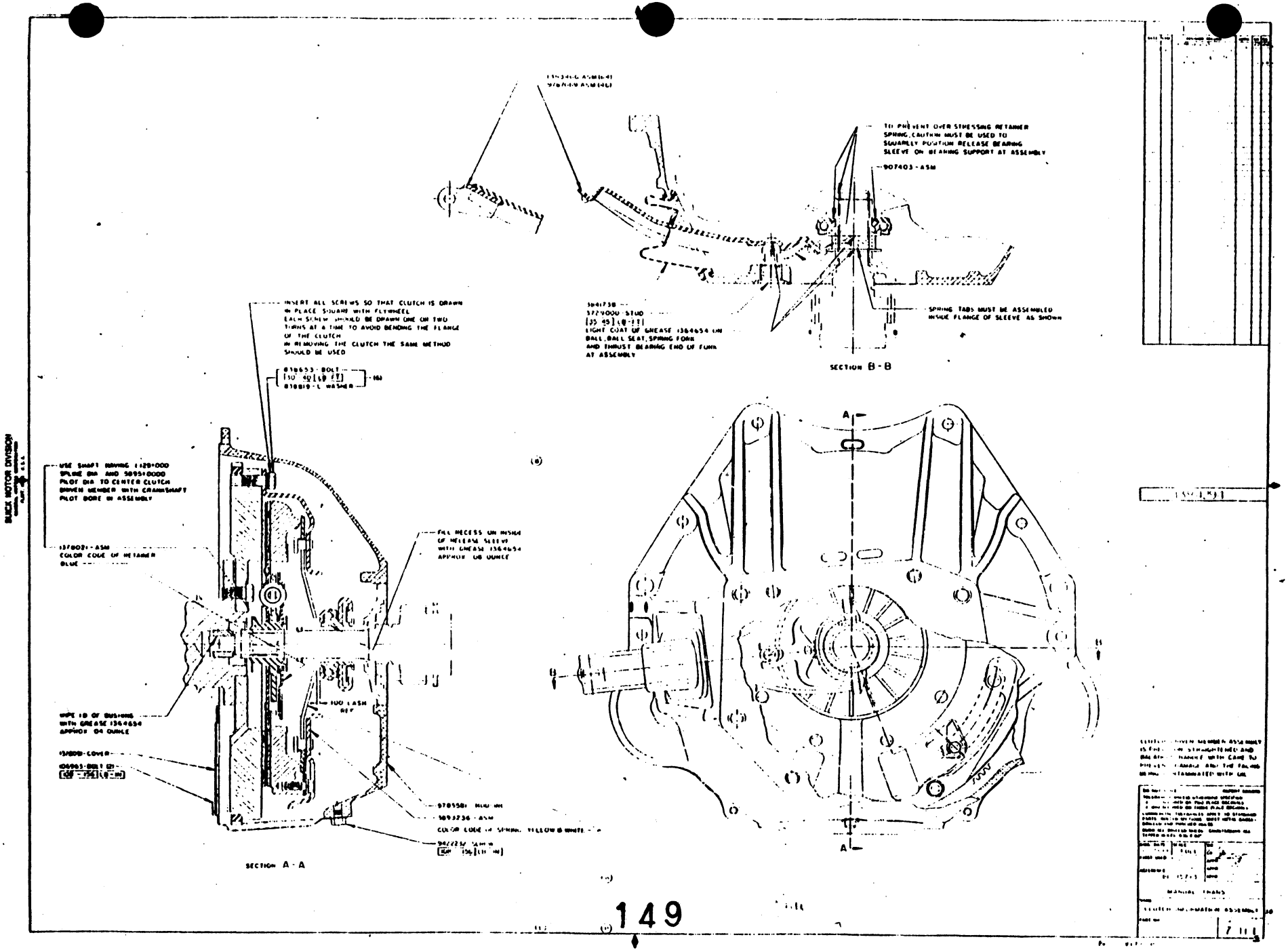

DAVE GRAHAM INC. - 2015
ALL RIGHTS RESERVED

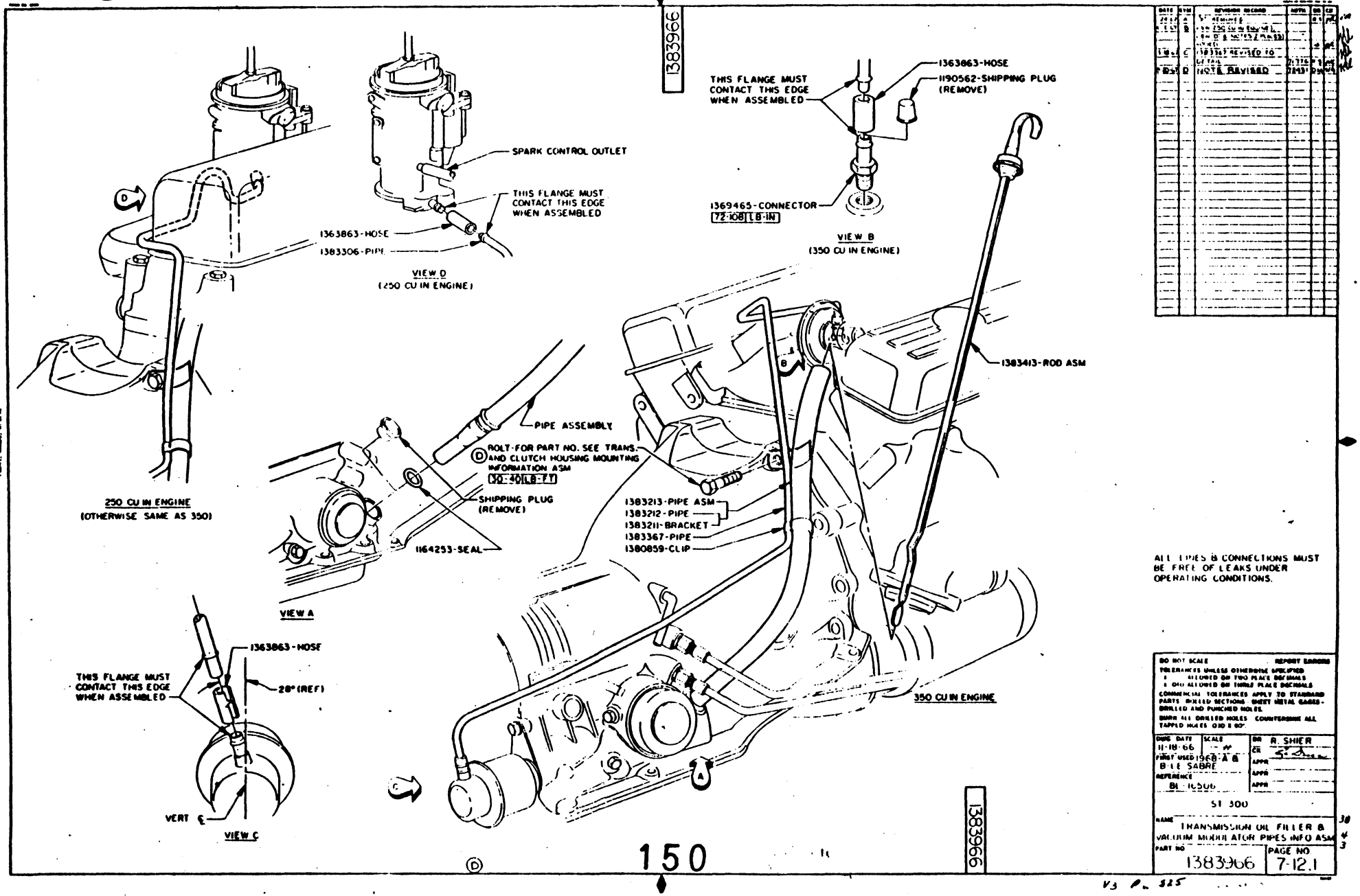

DATE	SYM	REVISION RECORD	NOTE	DR	CK
1966	A	[illegible]			
1-19-67	B	[illegible]			
1968	C	[illegible]			
8-30-68	D	NOTE REVISED	2143		

ALL PIPES & CONNECTIONS MUST BE FREE OF LEAKS UNDER OPERATING CONDITIONS.

DO NOT SCALE — REPORT ERRORS

TOLERANCES UNLESS OTHERWISE SPECIFIED
X ± .1 ALLOWED ON TWO PLACE DECIMALS
X.XX ± .03 ALLOWED ON THREE PLACE DECIMALS

COMMERCIAL TOLERANCES APPLY TO STANDARD PARTS INCLUDING SECTIONS, SHEET METAL GAGES, DRILLED AND PUNCHED HOLES.

BURR ALL DRILLED HOLES. COUNTERSINK ALL TAPPED HOLES .030 X 90°.

DWG DATE 11-18-66	SCALE - M	DR R. SHIER	
FIRST USED 1969 A B		CK	
REFERENCE B-L E SABRE		APPR	
BI-16500		APPR	
		APPR	

ST 300

NAME TRANSMISSION OIL FILLER & VACUUM MODULATOR PIPES INFO ASM

PART NO 1383966

PAGE NO 7-12.1

V3 P. 525

DAVE GRAHAM INC. - 2015
ALL RIGHTS RESERVED

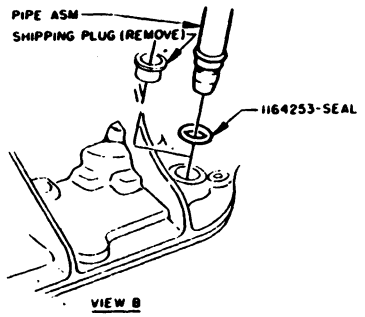

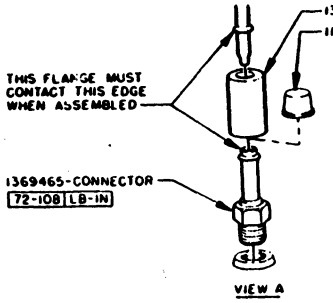

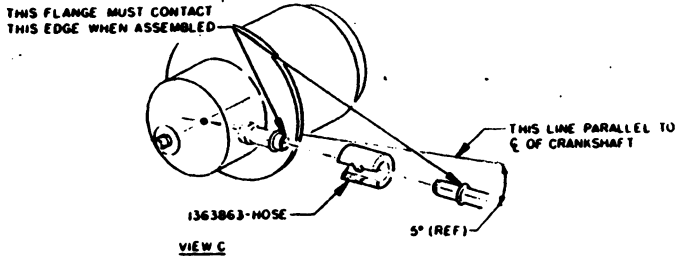

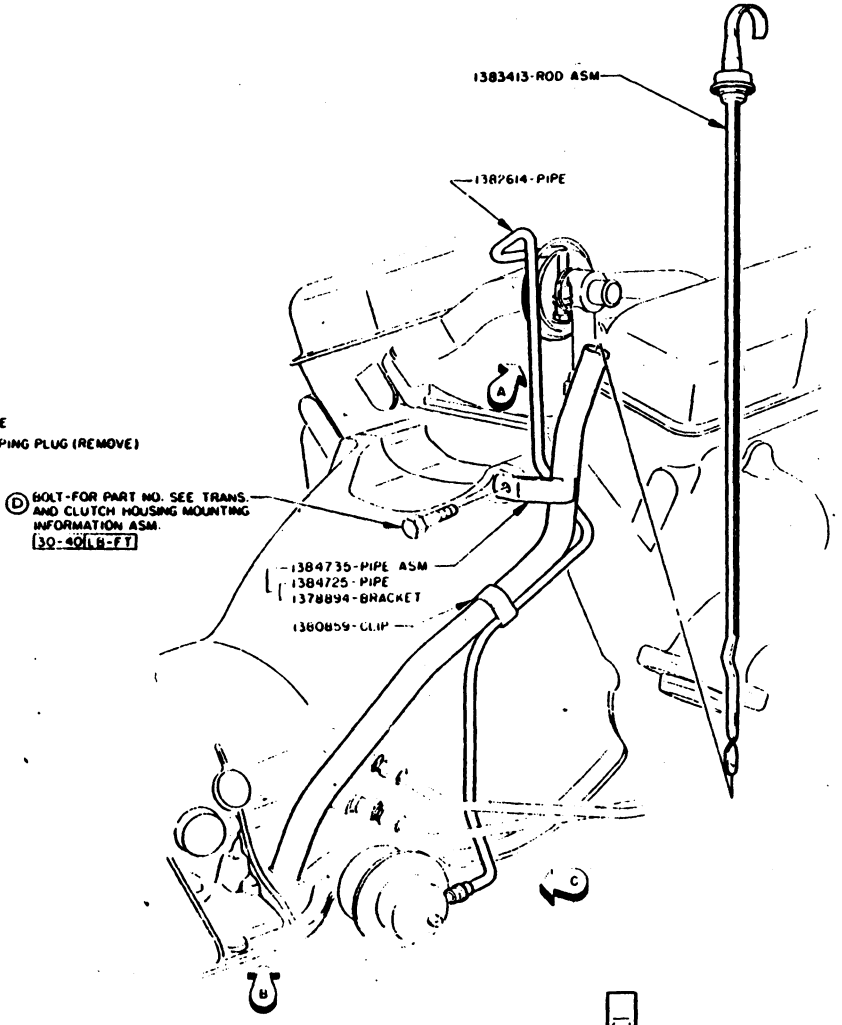

DATE	ITR	REVISION RECORD	APPR	DR	CK
		NOTE REVISED			

DO NOT SCALE — REPORT ERRORS
TOLERANCES UNLESS OTHERWISE SPECIFIED
X ALIGNED ON TWO PLACE DECIMALS
.XXX ALIGNED ON THREE PLACE DECIMALS
COMMERCIAL TOLERANCES APPLY TO STANDARD PARTS - ROLLED SECTIONS - SHEET METAL GAGES - DRILLED AND PUNCHED HOLES
BURR ALL DRILLED HOLES COUNTERSINK ALL TAPPED HOLES USD X 90°.

DWG. DATE	SCALE	DR R SHIER
9-15-66		CK
FIRST USED		APPR
1968 A,B,C 69		APPR
REFERENCE		APPR
BI 104		

ST 400

NAME TRANSMISSION OIL FILLER & VACUUM REGULATOR PIPES INFO ASM

PART NO. 1383104 — PAGE NO. 713.1

1383104

(D)

GENERAL MOTORS CORPORATION
FLINT, MICH. U.S.A.

DAVE GRAHAM INC. - 2015
ALL RIGHTS RESERVED

DAVE GRAHAM INC. - 2015
ALL RIGHTS RESERVED

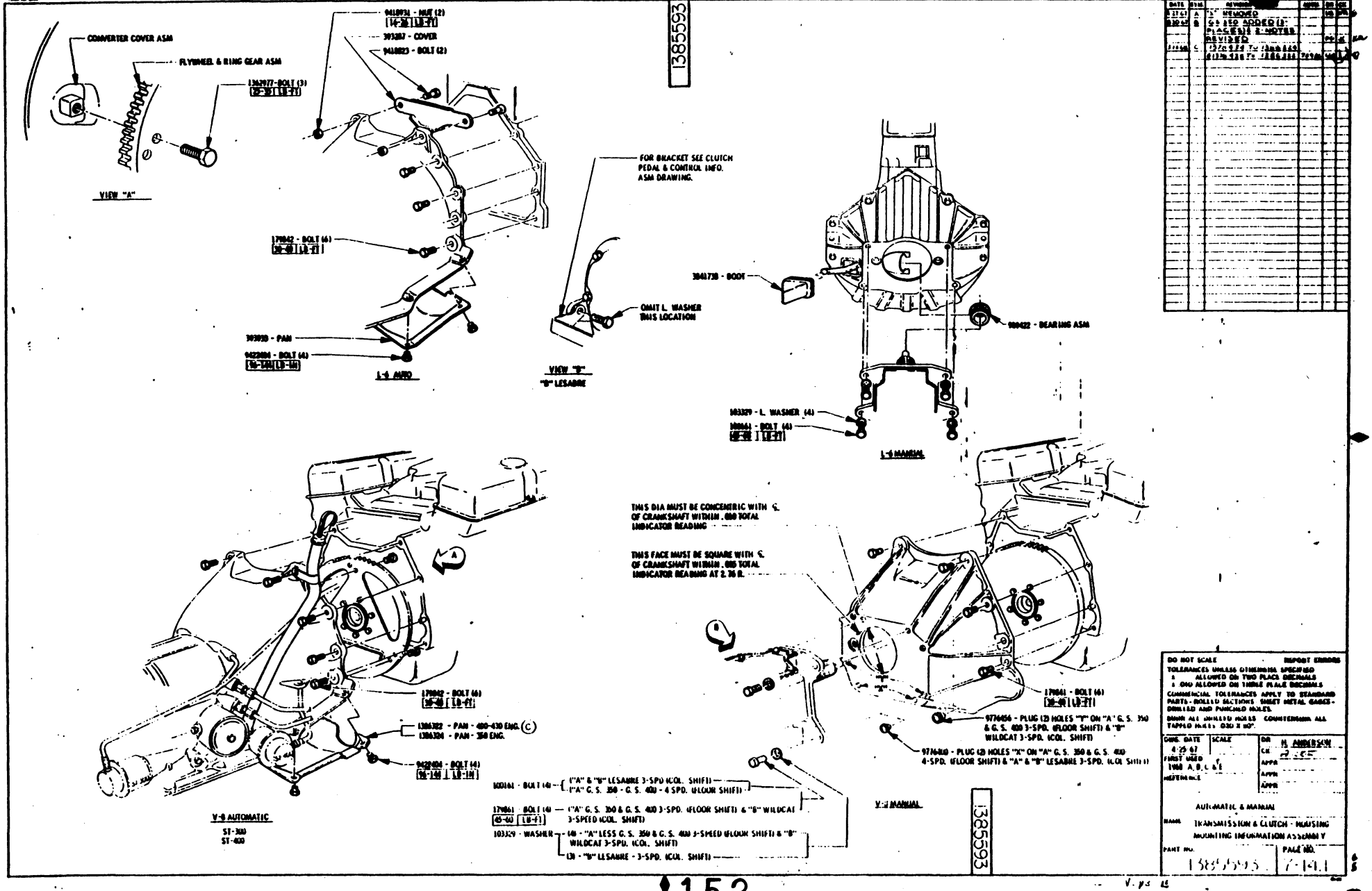

1968 BUICK ASSEMBLY INSTRUCTION MANUAL

SPECIAL - SKYLARK 43000 - 44000 SERIES
FUEL AND EXHAUST SYSTEM

	PAGES
Exhaust System Installation Assembly - L6 Eng.	8-2.1
Exhaust System Installations 350 Eng. - Muffler	8-3.1
Exhaust System (Dual) Installations 350 - 400 Cu. In-Mufflers	8-4.1
Exhaust System Installation Sportswagon only	8-5.1
Fuel System Information 350 & 400 cu. in. Coupes & Sedans	8-6.1
Fuel System Information 250 cu. in. L-6 Coupes & Sedans	8-6.2
Fuel System Information 350 & 400 cu. in. Regular Wagons Sports Wagon	8-6.3

Revised 8-1-67
PART NUMBER- 1383770
PAGE NUMBER- 8-1.0

DAVE GRAHAM INC. - 2015
ALL RIGHTS RESERVED

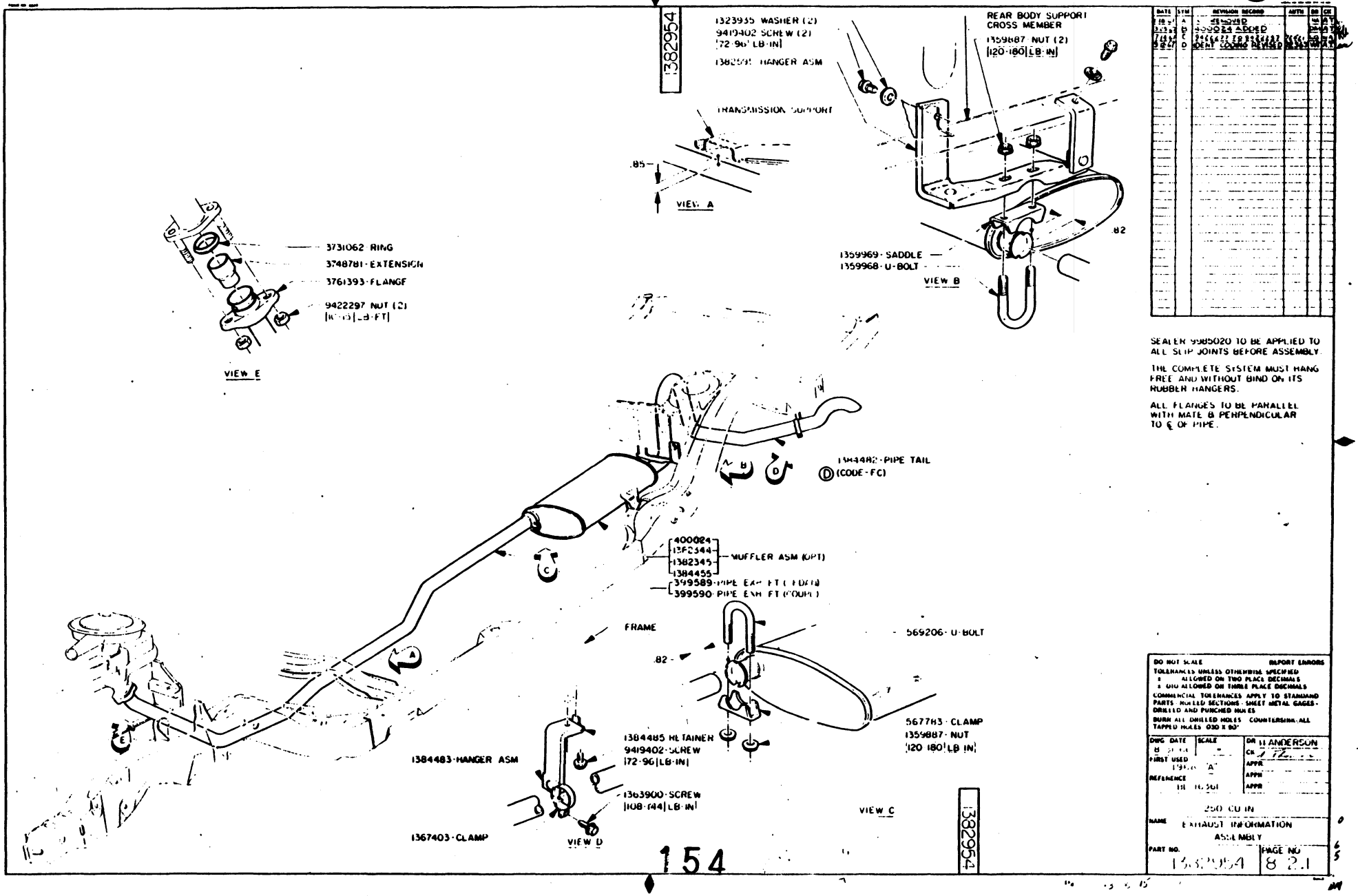

DATE	SYM	REVISION RECORD	AUTH	DR	CK
10-5-	A	[illegible] REVISED		[illegible]	AT
3-23-82	B	399584 ADDED		[illegible]	AT
7-16-82	C	[illegible]		[illegible]	[illegible]
9-8-82	D	DEAT COVING REVISED		[illegible]	[illegible]

SEALER 9985020 TO BE APPLIED TO ALL SLIP JOINTS BEFORE ASSEMBLY.

THE COMPLETE SYSTEM MUST HANG FREE AND WITHOUT BIND ON ITS RUBBER HANGERS.

ALL FLANGES TO BE PARALLEL WITH MATE & PERPENDICULAR TO ℄ OF PIPE.

DO NOT SCALE — REPORT ERRORS

TOLERANCES UNLESS OTHERWISE SPECIFIED
X ALLOWED ON TWO PLACE DECIMALS
X.XXX ALLOWED ON THREE PLACE DECIMALS
COMMERCIAL TOLERANCES APPLY TO STANDARD PARTS ROLLED SECTIONS - SHEET METAL GAGES - DRILLED AND PUNCHED HOLES
BURR ALL DRILLED HOLES COUNTERSINK ALL TAPPED HOLES .030 X 80°

DWG DATE	SCALE	DR
8 [illegible]	[illegible]	H ANDERSON
FIRST USED		CK
19[illegible] A		APPR
REFERENCE		APPR
[illegible]		APPR

250 CU IN

NAME EXHAUST INFORMATION ASSEMBLY

PART NO. 1382954 PAGE NO 8 2.1

GENERAL MOTORS CORPORATION PLANT, MODEL, U.S.A.

DAVE GRAHAM INC. - 2015
ALL RIGHTS RESERVED

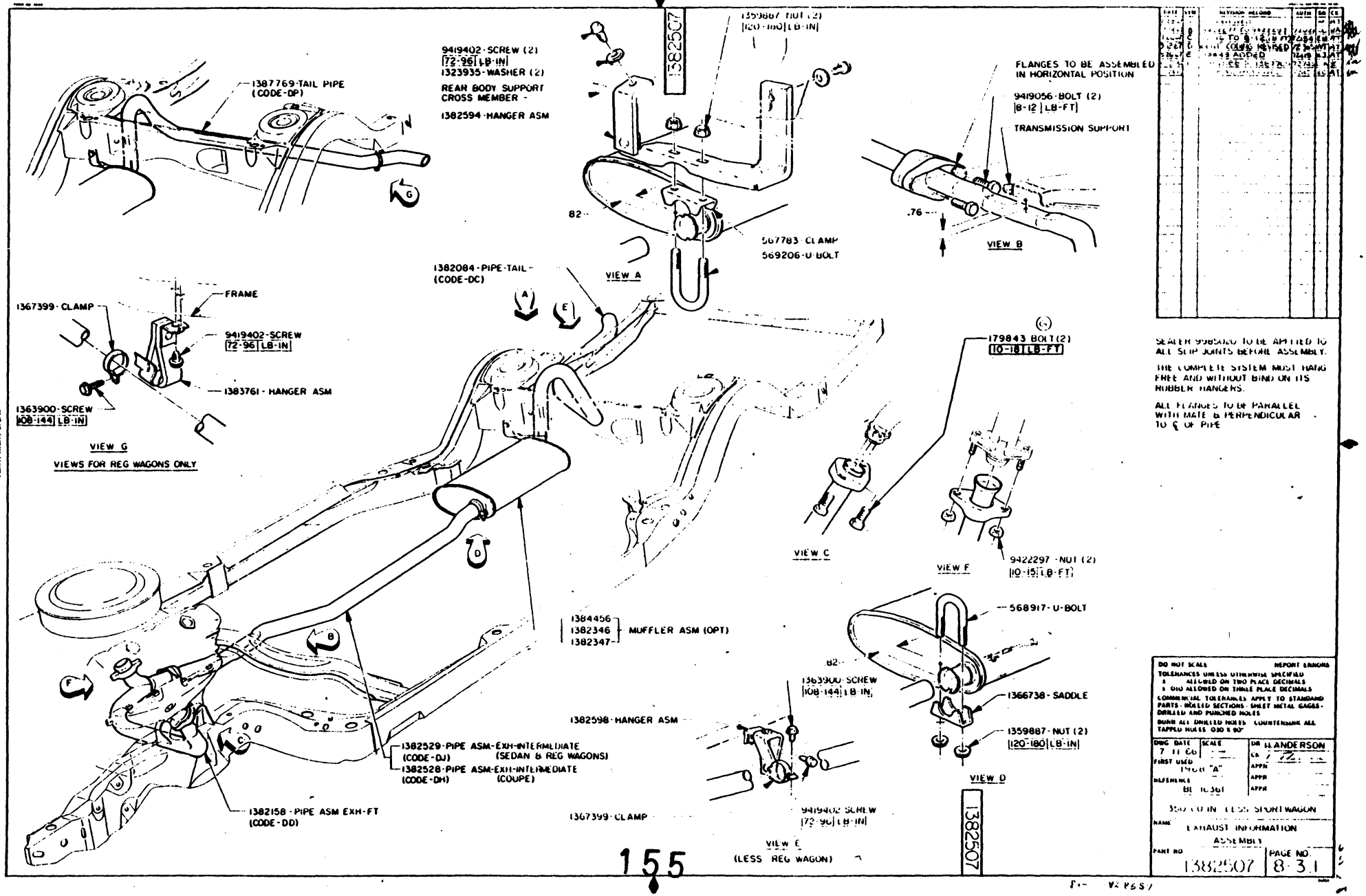

DAVE GRAHAM INC. - 2015
ALL RIGHTS RESERVED

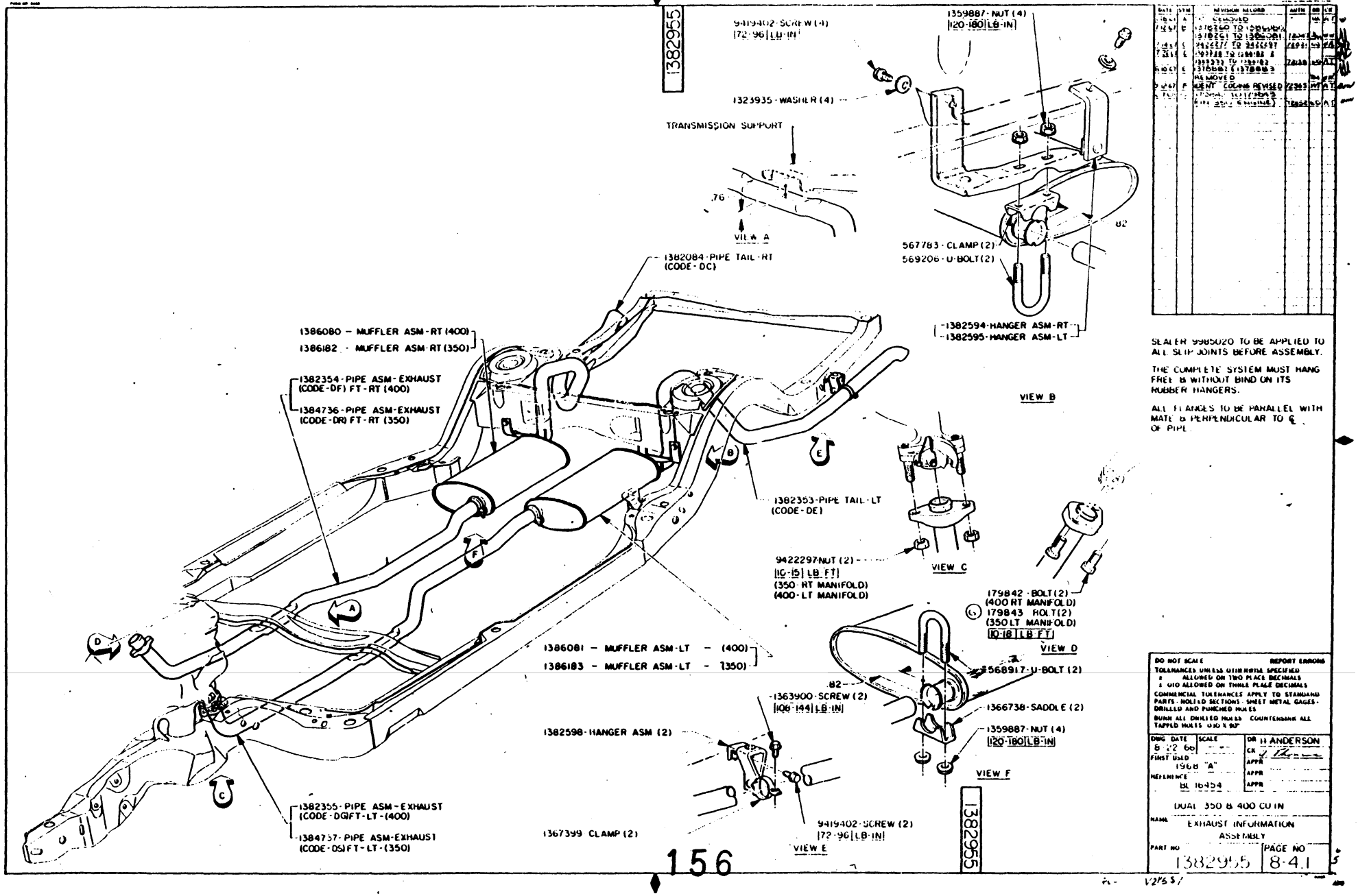

DATE	SYM	REVISION RECORD	AUTH	DR	CK
10-61	A	CANCELED			
7-15-67	B	3176260 TO 3176261			
7-15-67	C	3176261 TO 3176262			
7-15-67	D	3176262 TO 3176263			
7-15-67	E	3176263 TO 3176264			
10-6-67	F	REMOVED			
12-6-67	G	CURRENT COLORS REVISED	72363	MT	AT

SEALER 9985020 TO BE APPLIED TO ALL SLIP JOINTS BEFORE ASSEMBLY.

THE COMPLETE SYSTEM MUST HANG FREE & WITHOUT BIND ON ITS RUBBER HANGERS.

ALL FLANGES TO BE PARALLEL WITH MATE & PERPENDICULAR TO ℄ OF PIPE.

DO NOT SCALE — REPORT ERRORS
TOLERANCES UNLESS OTHERWISE SPECIFIED
± ALLOWED ON TWO PLACE DECIMALS
± 010 ALLOWED ON THREE PLACE DECIMALS
COMMERCIAL TOLERANCES APPLY TO STAMPED PARTS - NOTED SECTIONS - SHEET METAL GAGES - DRILLED AND PUNCHED HOLES
BURR ALL DRILLED HOLES COUNTERSINK ALL TAPPED HOLES 030 X 82°

DWG DATE	SCALE	DR H ANDERSON
8-22-66		CK
FIRST USED		APPR
1968 "A"		APPR
REFERENCE		APPR
BL 16454		

DUAL 350 & 400 CU IN

NAME EXHAUST INFORMATION ASSEMBLY

PART NO	PAGE NO
1382955	8-4.1

PLANT, MICH. U.S.A.

DAVE GRAHAM INC. - 2015
ALL RIGHTS RESERVED

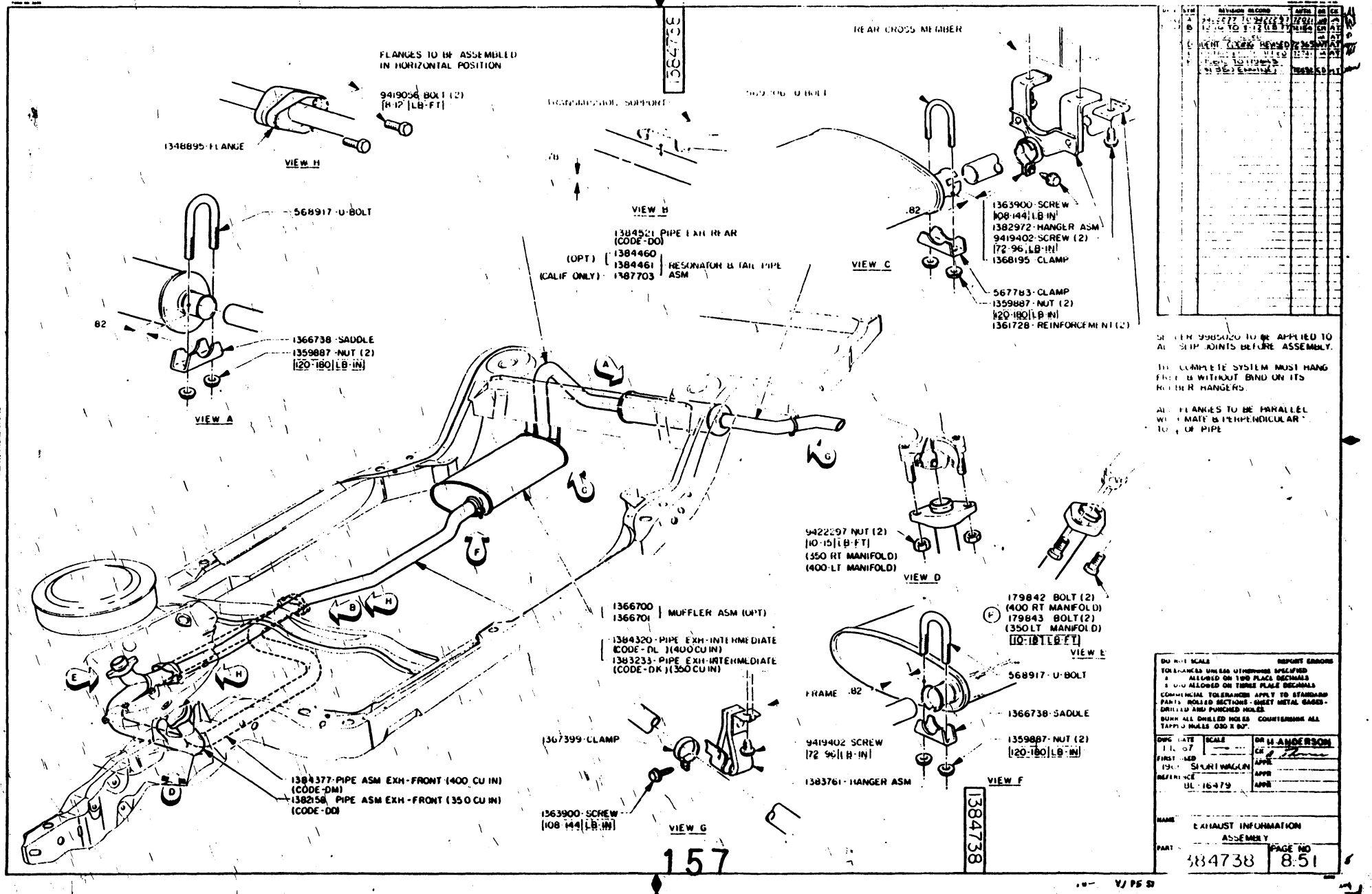

DAVE GRAHAM INC. - 2015
ALL RIGHTS RESERVED

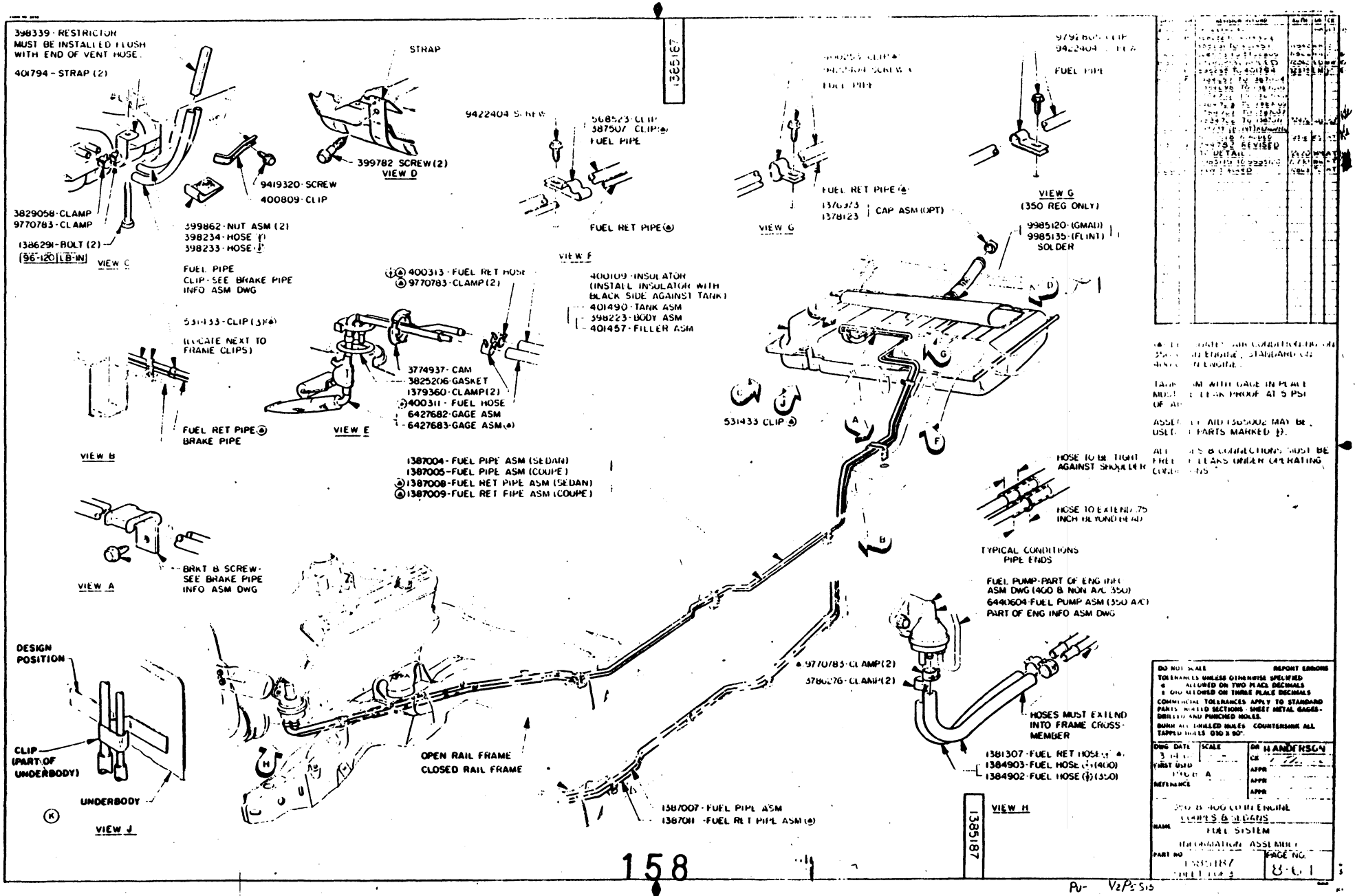

DAVE GRAHAM INC. - 2015
ALL RIGHTS RESERVED

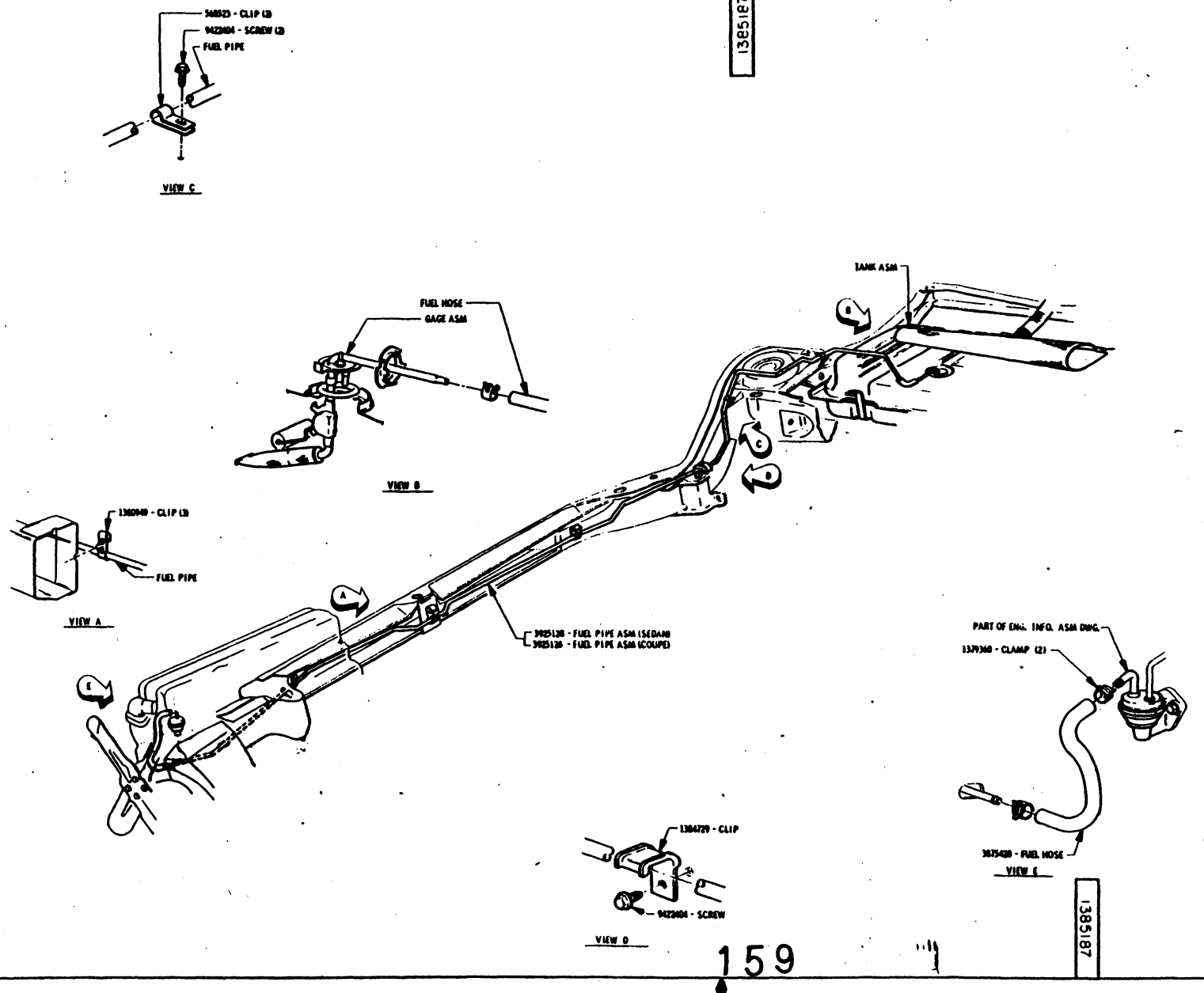

DATE	SYM	REVISION RECORD	AUTH	DR	CK
	A	ELIMINATED			

OTHERWISE SAME AS SHEET NO. 1

DO NOT SCALE — REPORT ERRORS
TOLERANCES UNLESS OTHERWISE SPECIFIED
± ALLOWED ON TWO PLACE DECIMALS
± .010 ALLOWED ON THREE PLACE DECIMALS
COMMERCIAL TOLERANCES APPLY TO STANDARD PARTS - ROLLED SECTIONS - SHEET METAL GAUGES - DRILLED AND PUNCHED HOLES.
BREAK ALL DRILLED HOLES. COUNTERSINK ALL TAPPED HOLES .030 X 82°.

DUE DATE 3 14 67	SCALE	DR	H. ANDERSON
FIRST USED 1968 A		CK	
REFERENCE		APPR.	
		APPR.	
		APPR.	

NAME: 350 CU IN ENGINE CHEVELLE SEDANS
FUEL SYSTEM INFORMATION ASSEMBLY
PART NO 1385187 SHEET 2 of 3
PAGE NO 8-62

DAVE GRAHAM INC. - 2015
ALL RIGHTS RESERVED

DAVE GRAHAM INC. - 2015
ALL RIGHTS RESERVED

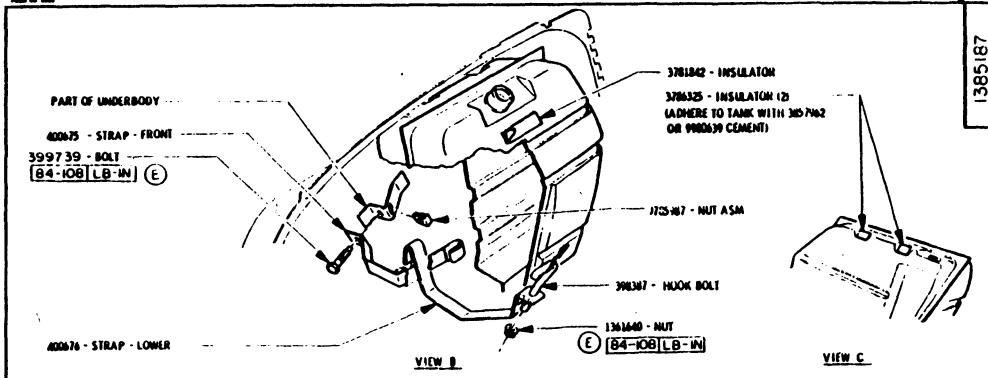

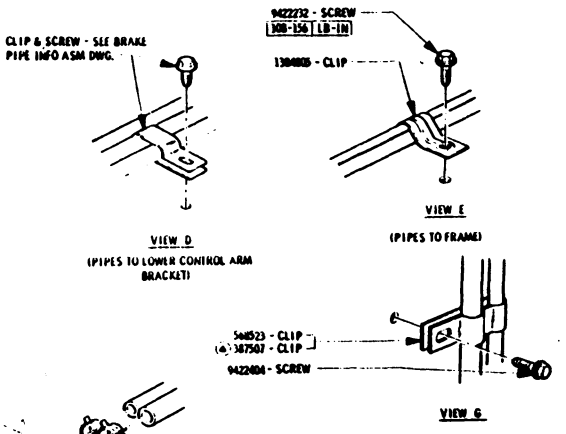

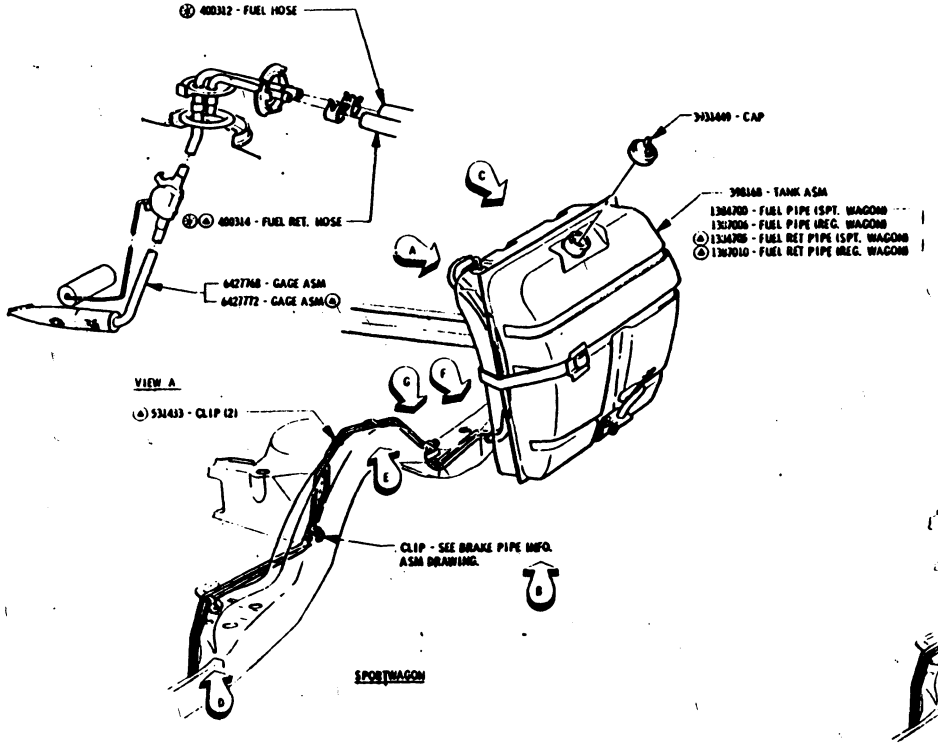

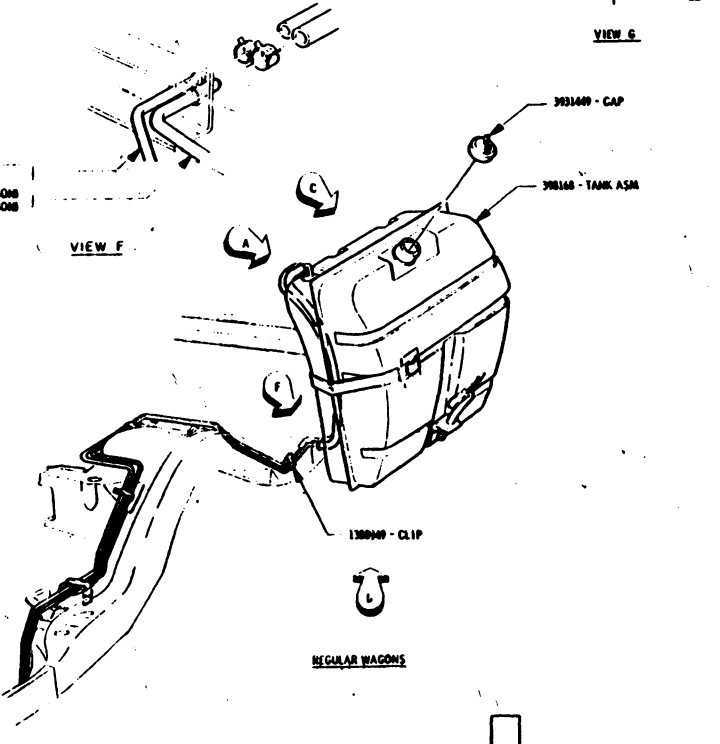

DATE	SYM	REVISION RECORD	AUTH	DR	CK
		2908243 TO 2931199 (2-PLACES)			
		3226662 TO 3765206			
		1384699 TO 1387006			
		1367009 TO 1387010			

OTHERWISE SAME AS SHEET NO. 1

DO NOT SCALE — REPORT ERRORS
TOLERANCES UNLESS OTHERWISE SPECIFIED
X ALLOWED ON TWO PLACE DECIMALS
X .010 ALLOWED ON THREE PLACE DECIMALS
COMMERCIAL TOLERANCES APPLY TO STANDARD PARTS - ROLLED SECTIONS - SHEET METAL GAGES - DRILLED AND PUNCHED HOLES
BURR ALL DRILLED HOLES COUNTERSINK ALL TAPPED HOLES 030 X 80°

DWG DATE 3-14-67	SCALE	DR M. ANDERSON	
FIRST USED 1968 "A"		CK	
REFERENCE XR 9364 IN 4479		APPR.	
		APPR.	
		APPR.	

350 & 400 CU. IN. ENGINE WAGONS

NAME FUEL SYSTEM INFORMATION ASM

PART NO. 1385187 | PAGE NO. 8-6.3

SHEET 3 OF 3 SHEETS

BUICK MOTOR DIVISION
GENERAL MOTORS CORPORATION
FLINT, MICH., U.S.A.

1385187

1968 BUICK ASSEMBLY INSTRUCTION MANUAL

SPECIAL - SKYLARK 43000 - 44000 SERIES

STEERING LINKAGE - COLUMNS & SHIFT CONTROLS (SECTION 9)

	PAGES
General Information	9-1.1
Steering Column Usage - Chart	9-1.2
Steering Gear Pump and Linkage (V-8) Installations - Power Reservoir Fill Requirements & Linkage Tightening Instructions (L-6)	9-2.1 9-2.2
Steering Column & Upper Trans. Controls - Levers - Knobs - Flange Assembly - Neutral & Back Up Lamp Switch Installations. Manual & Automatic Trans. See Sect. 7 for lower controls	9-3.1
Steering Column with Floor Shift Trans. Tilt & Non Tilt Wheel & Column Shift with Tilt Wheel Installations.	9-4.1
Steering Column Installations Mandatory Instructions - Sequence & Requirements	9-5.1 9-5.2
Steering Wheel & Horn Bar Installations - Signal Cancel Cam & Cap Assembly	9-7.1

Revised 8-1-67

PART NUMBER- 1383770

PAGE NUMBER- 9-1.0

DAVE GRAHAM INC. - 2015
ALL RIGHTS RESERVED

SPECIAL - SKYLARK 43000 - 44000 SERIES

STEERING COLUMN CODE AND USAGE

ASM. NO.	SHOWN ON	MAN. CODE	TYPE OF COLUMN				TYPE OF TRANS.		MODEL USAGE	
			STD		TILT				SPECIAL DELUXE, SKYLARK AND WAGONS	G.S. 400 AND SPORTWAGON 400
			COL	FLOOR	COL	FLOOR	MAN	AUTO		
7802851	Self	KK	X				X		X	
7801814	7801813	SE	X					X	X	
*7801828	7801813	SL		X			X	X	X	
7803792		KE	X					X		X
7803643		KR		X			X	X		X
7801970	Self	KS			X			X	X	
7801971	Self	KT				X		X	X	
7803790		KU			X			X		X
7803791		KV				X	X	X		X

*9-19-67

PART NUMBER- 1383770
PAGE NUMBER- 9-1.2

DAVE GRAHAM INC. - 2015
ALL RIGHTS RESERVED

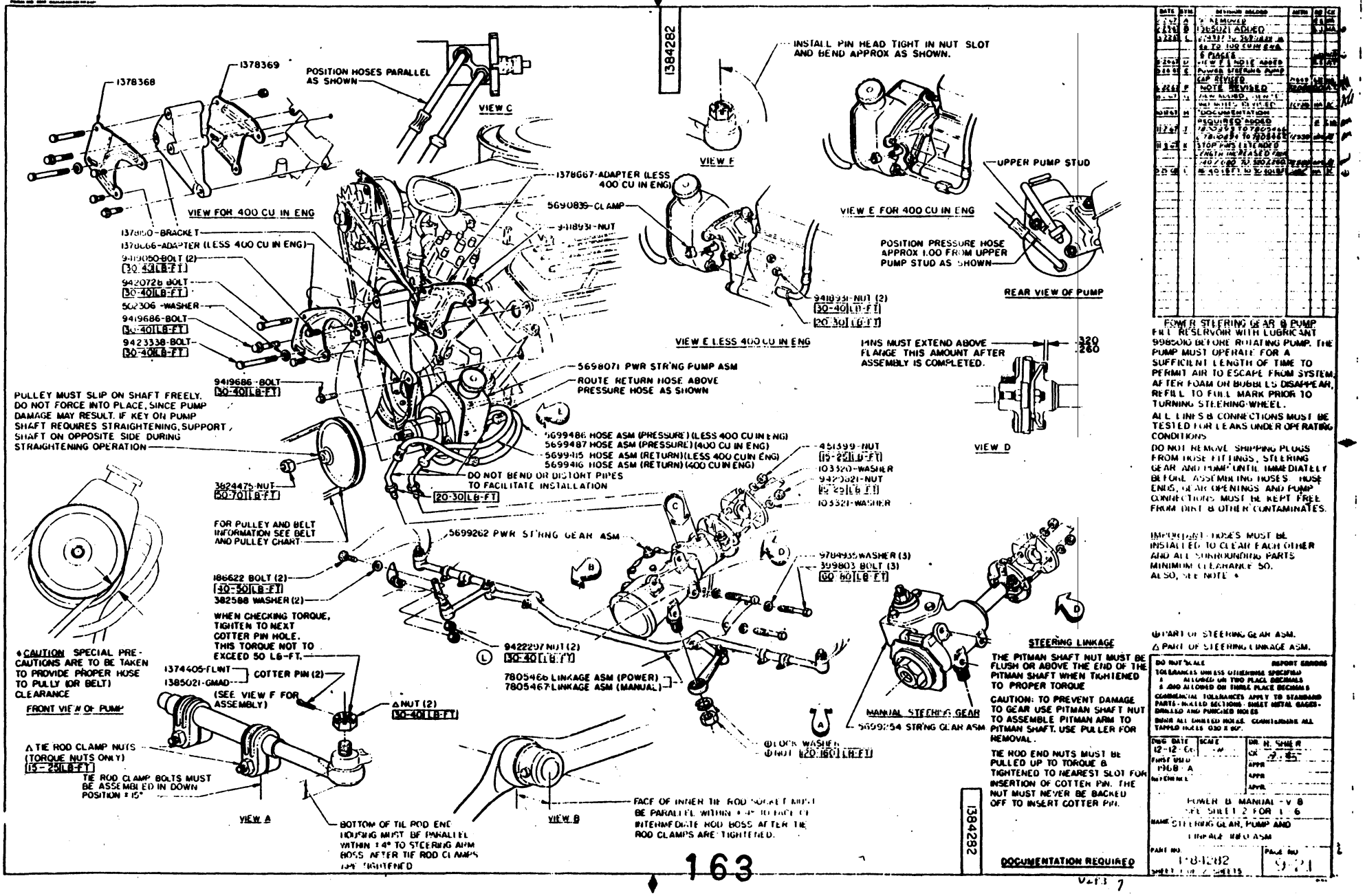

DAVE GRAHAM INC. - 2015
ALL RIGHTS RESERVED

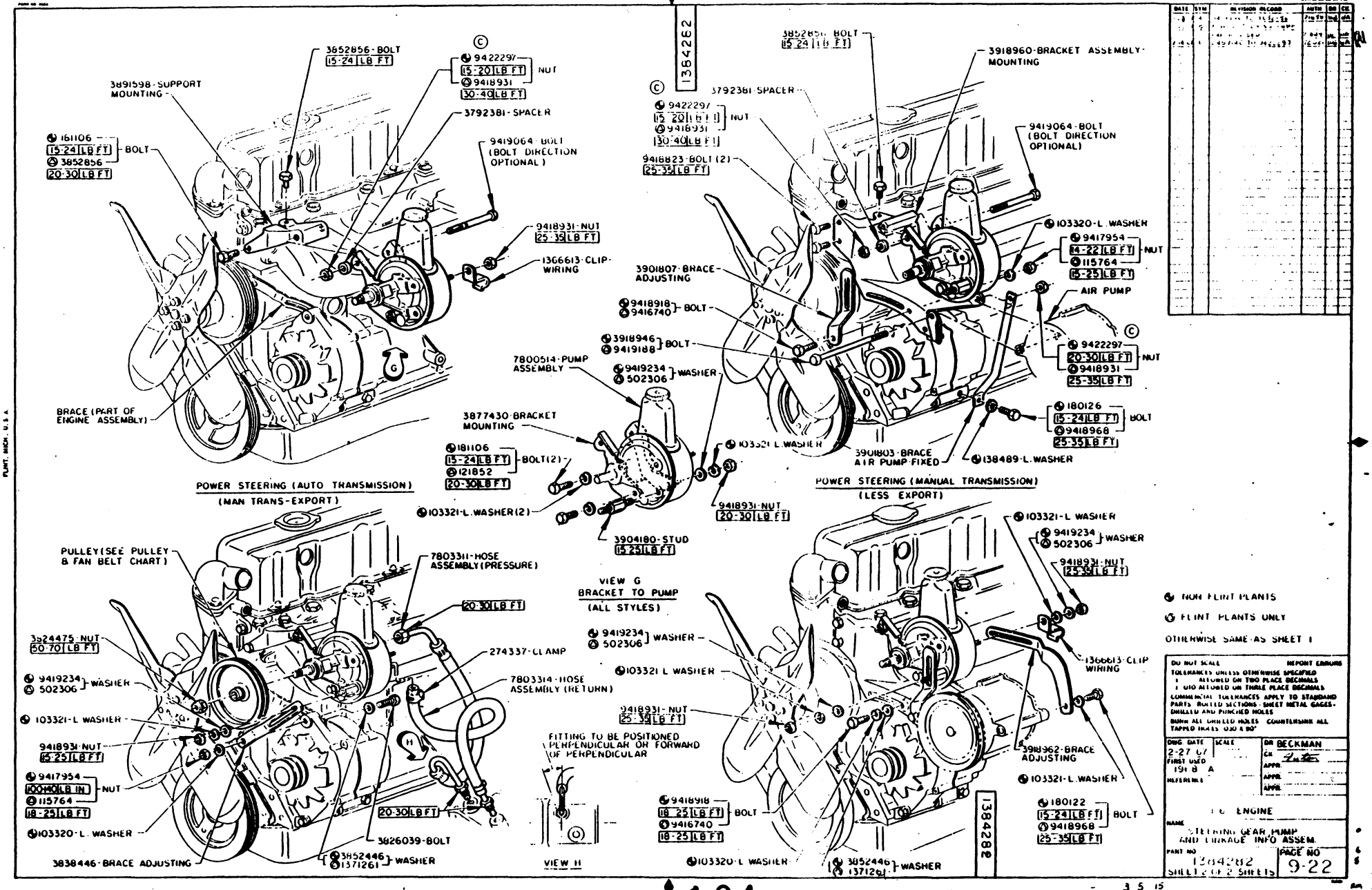

DAVE GRAHAM INC. - 2015
ALL RIGHTS RESERVED

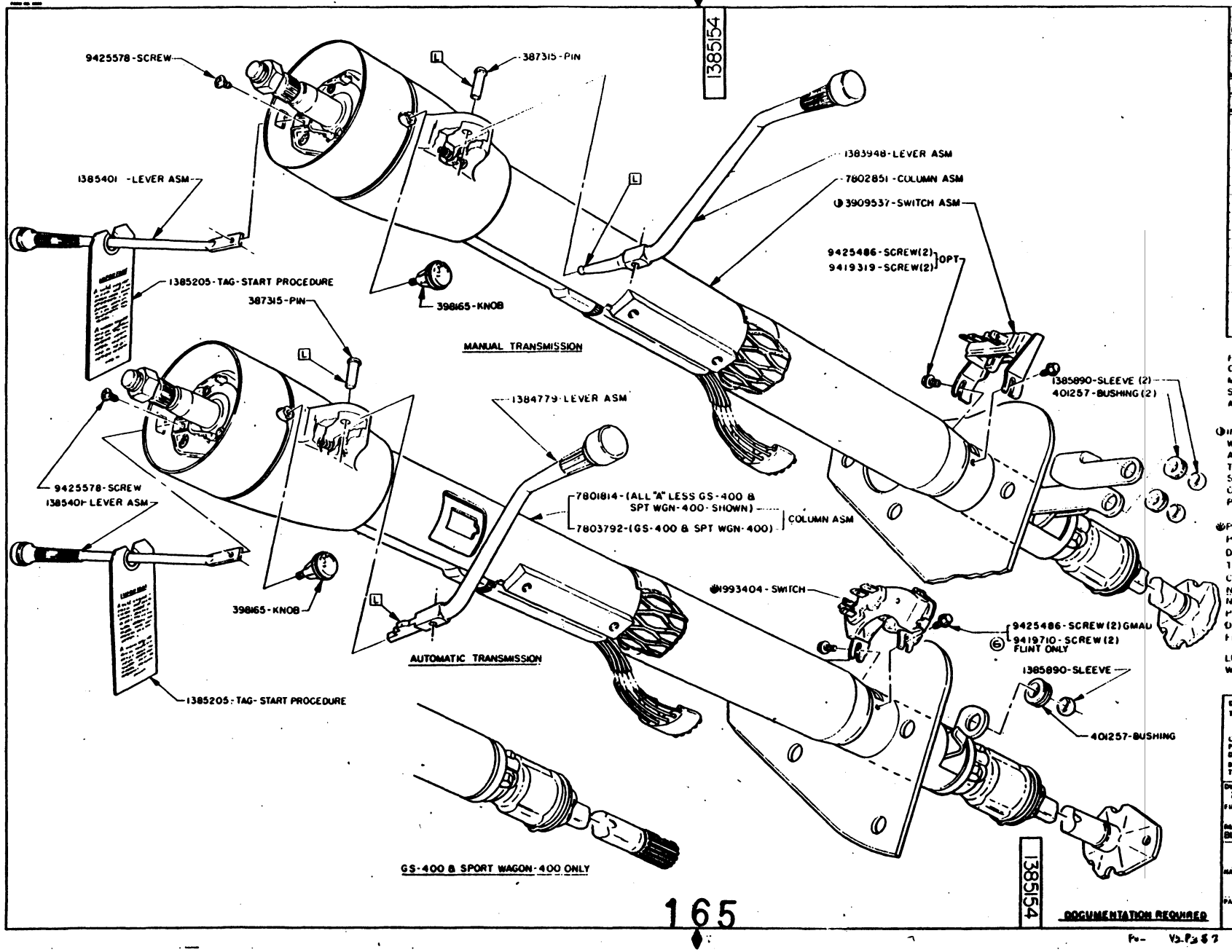

DATE	SYM	REVISION RECORD	APPR.	DR.	CK.
[illegible]	A	"X" REMOVED.			
[illegible]	B	7803792 ADDED.	[illegible]		
[illegible]	C	1385205 REVISED TO DETAIL 2 PLACES		[illegible]	[illegible]
[illegible]	D	[illegible]	[illegible]	[illegible]	AT
[illegible]	E	DOCUMENTATION REQUIRED ADDED		[illegible]	[illegible]
[illegible]	F	1385891 TO 401257 2 PLACES	[illegible]	[illegible]	[illegible]
[illegible]	G	[illegible] REMOVED. [illegible] ADDED	[illegible]	[illegible]	AT

FOR INSTALLATION SEE STEERING COLUMN INSTALLATION, INSTRUMENT PANEL INFORMATION AND STEERING GEAR, PUMP AND LINKAGE INFORMATION DRAWINGS.

(1) INSTALL BACK-UP LIGHT SWITCH WITH MOUNTING SLOTS CENTERED. ADJUST AS REQUIRED TO ASSURE THAT LIGHTS ARE ON WITH TRANS. SHIFTED INTO REVERSE, BUT NEVER ON WHEN SHIFTED INTO ANY OTHER POSITION.

(2) POSITION GEARSHIFT IN "DRIVE" POSITION AGAINST DRIVE STOP ON DETENT. LOOSE ASSEMBLE SWITCH TO COLUMN. HOLD SWITCH TIGHT TO COLUMN THEN TIGHTEN RIGHT HAND NUT FIRST.
NOTE: SWITCHES ARE RECEIVED PINNED IN DRIVE POSITION. PIN IS DESIGNED TO BREAK AWAY WITH FIRST SHIFT MOVEMENT.

LUBRICATE AREAS INDICATED [L] WITH 9985024 BEFORE ASM.

DO NOT SCALE — REPORT ERRORS
TOLERANCES UNLESS OTHERWISE SPECIFIED
± ALLOWED ON TWO PLACE DECIMALS
± .010 ALLOWED ON THREE PLACE DECIMALS
COMMERCIAL TOLERANCES APPLY TO STANDARD PARTS - ROLLED SECTIONS - SHEET METAL GAGES - DRILLED AND PUNCHED HOLES.
BURR ALL DRILLED HOLES. COUNTERSINK ALL TAPPED HOLES .030 X 80°.

DWG. DATE 2-1-67	SCALE	DR. W MEADE	
FIRST USED 1968-A		CK.	
		APPR.	
REFERENCE BL-16457 BL-16486		APPR.	
MANUAL & AUTOMATIC TRANSMISSION			
NAME STEERING COLUMN & UPPER CONTROLS INFO ASSEMBLY			
PART NO. 1385154		PAGE NO. 9-3.1	

DOCUMENTATION REQUIRED

GENERAL MOTORS CORPORATION FLINT, MICH., U.S.A.

DAVE GRAHAM INC. - 2015
ALL RIGHTS RESERVED

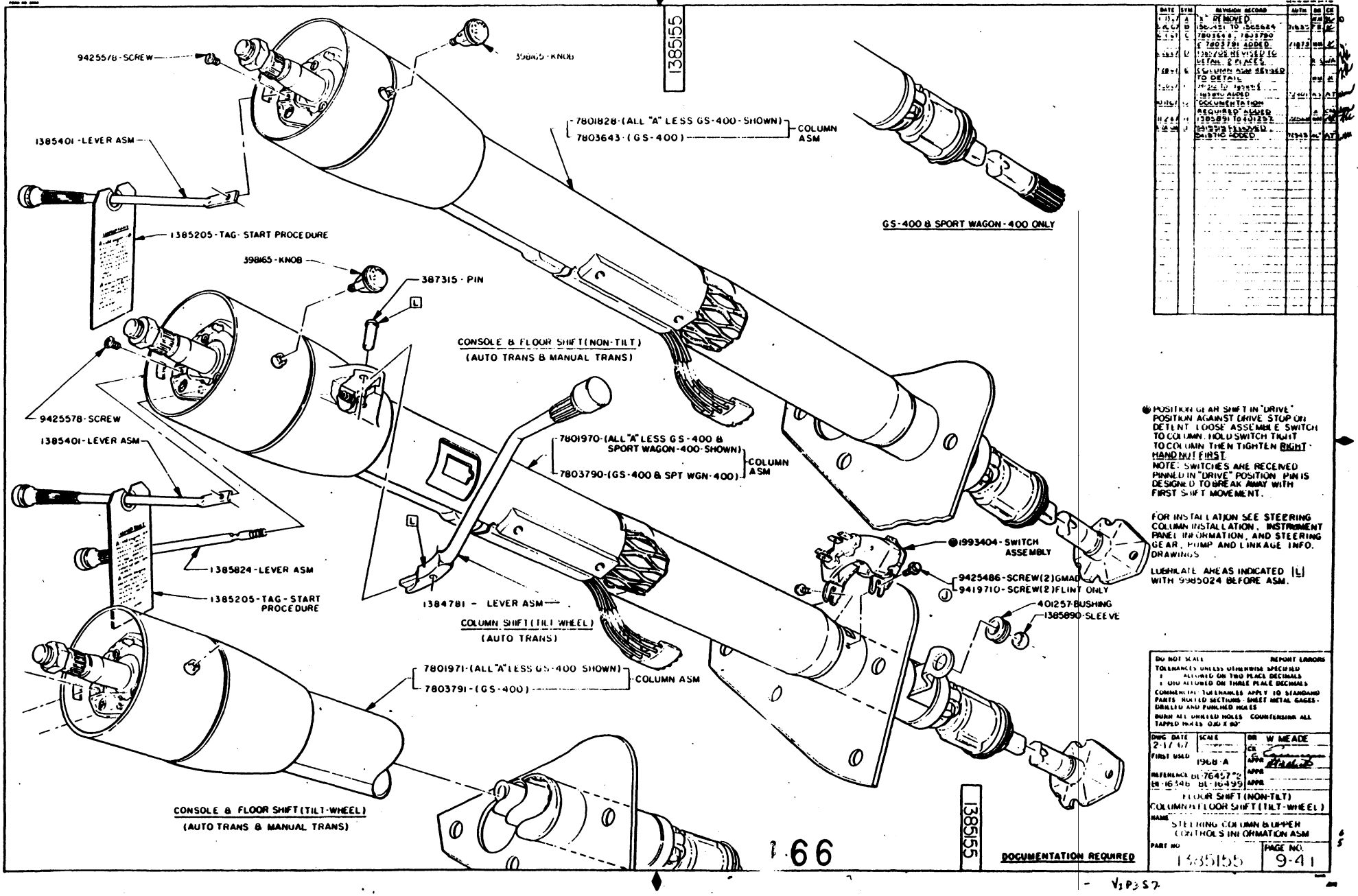

GENERAL MOTORS CORPORATION
FLINT, MICH., U.S.A.

DATE	SYM	REVISION RECORD	AUTH	DR	CK
[illegible]	A	"X" REMOVED.			
[illegible]	B	1385451 TO 1385624	[illegible]	[illegible]	[illegible]
[illegible]	C	7803643, 7803790 & 7803791 ADDED.	[illegible]	[illegible]	[illegible]
[illegible]	D	1385205 REVISED TO DETAIL 2 PLACES.		[illegible]	[illegible]
[illegible]	E	COLUMN ASM REVISED TO DETAIL		[illegible]	[illegible]
[illegible]	F	[illegible] ADDED	[illegible]	[illegible]	[illegible]
[illegible]	G	DOCUMENTATION REQUIRED ADDED		[illegible]	[illegible]
[illegible]	H	1385891 TO 401257	[illegible]	[illegible]	[illegible]
[illegible]	J	[illegible] REMOVED. [illegible] ADDED	[illegible]	[illegible]	[illegible]

POSITION GEAR SHIFT IN "DRIVE" POSITION AGAINST DRIVE STOP ON DETENT. LOOSE ASSEMBLE SWITCH TO COLUMN. HOLD SWITCH TIGHT TO COLUMN THEN TIGHTEN RIGHT HAND NUT FIRST.
NOTE: SWITCHES ARE RECEIVED PINNED IN "DRIVE" POSITION. PIN IS DESIGNED TO BREAK AWAY WITH FIRST SHIFT MOVEMENT.

FOR INSTALLATION SEE STEERING COLUMN INSTALLATION, INSTRUMENT PANEL INFORMATION, AND STEERING GEAR, PUMP AND LINKAGE INFO. DRAWINGS.

LUBRICATE AREAS INDICATED [L] WITH 9985024 BEFORE ASM.

DO NOT SCALE — REPORT ERRORS
TOLERANCES UNLESS OTHERWISE SPECIFIED
± ALLOWED ON TWO PLACE DECIMALS
± .010 ALLOWED ON THREE PLACE DECIMALS
COMMERCIAL TOLERANCES APPLY TO STANDARD PARTS ROLLED SECTIONS - SHEET METAL GAGES - DRILLED AND PUNCHED HOLES
BURR ALL DRILLED HOLES COUNTERSINK ALL TAPPED HOLES .030 X 90°

DWG DATE 2-17-67	SCALE	DR W MEADE	
FIRST USED 1968-A		CK	
REFERENCE BL-76457 #2 BL-16346 BL-16499		APPR	
		APPR	
		APPR	

FLOOR SHIFT (NON-TILT)
COLUMN & FLOOR SHIFT (TILT-WHEEL)
NAME STEERING COLUMN & UPPER CONTROLS INFORMATION ASM
PART NO 1385155 — PAGE NO. 9-41

1-66

V1P357

DAVE GRAHAM INC. - 2015
ALL RIGHTS RESERVED

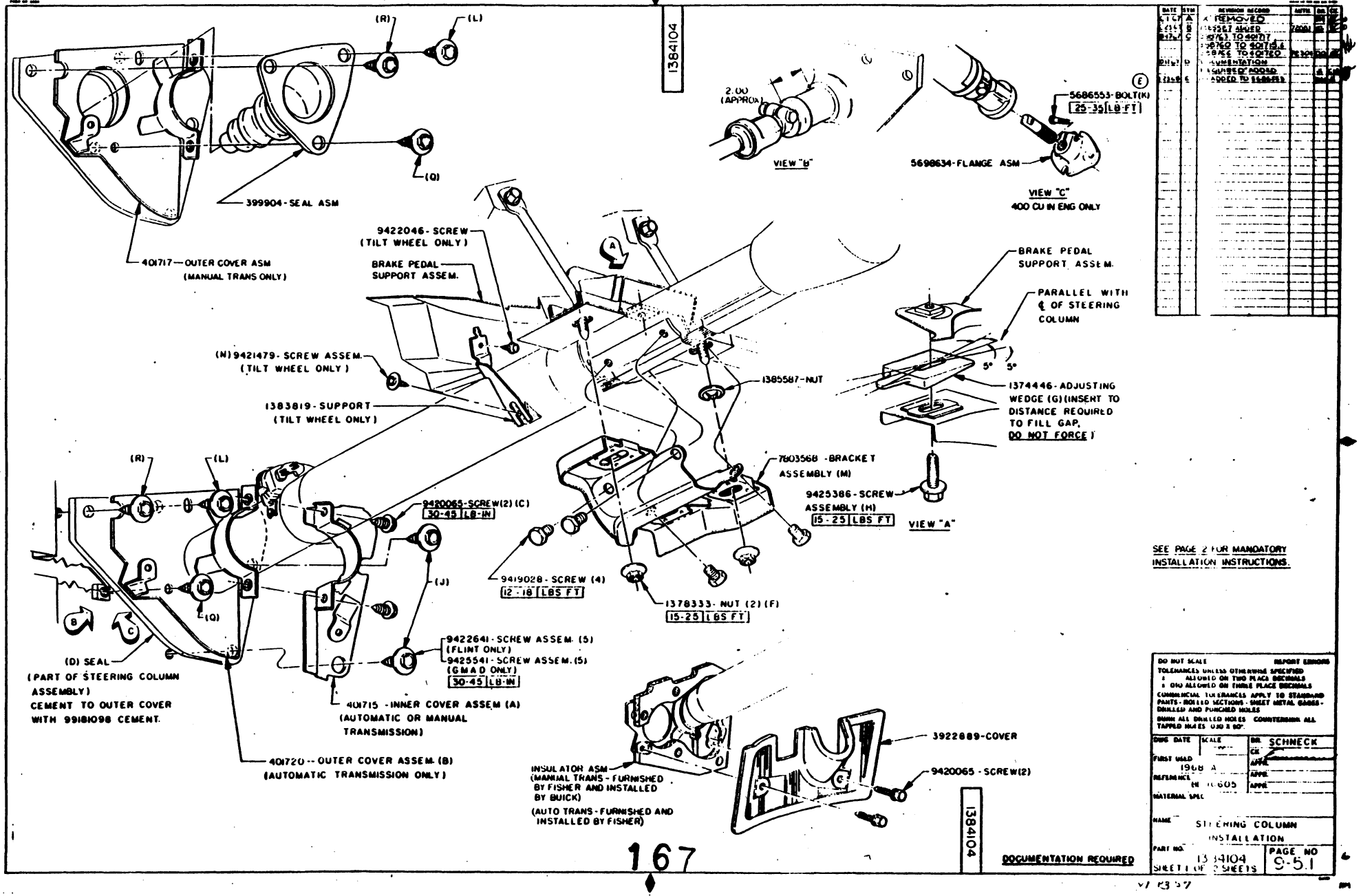

DAVE GRAHAM INC. - 2015
ALL RIGHTS RESERVED

BUICK MOTOR DIVISION
GENERAL MOTORS CORPORATION
FLINT, MICH., U.S.A.

I. MANDATORY INSTRUCTIONS

1. LOOSE ASSEMBLE INNER (A) AND OUTER (B) DASH COVER ON COLUMN WITH TWO SCREWS (C). OPTIONAL TO TIGHTEN TOP SCREW. DASH COVER MUST BE ABLE TO SLIDE ON COLUMN.
2. GLUE COVER SEAL (D) TO THE OUTER COVER (B)
3. POSITION THE ROLLED PORTION OF THE DASH SEAL (PART OF COLUMN ASSEMBLY) AT THE COLUMN LOWER REACTION TAB, TWO INCHES FROM BOTTOM OF THE JACKS.

   CAUTION: THE ROLLED PORTION OF THE SEAL MUST BE DIRECTED DOWN THE COLUMN TOWARD THE FRONT OF THE CAR AND MUST REMAIN IN THIS POSITION DURING AND AFTER COLUMN INSTALLATION (SEE VIEW "B")
4. ATTACH BRACKET (M) TO JACKET AND TIGHTEN FOUR BOLTS TO SPECIFIED TORQUE.
5. SET BODY ON FRAME WITH SPECIFIED GAGE PINS AT #1 AND #4 LOCATION. TIGHTEN BODY BOLTS ADJACENT TO THESE GAGE PINS PRIOR TO REMOVAL OF GAGE PINS.

II. MANDATORY INSTALLATION SEQUENCE

1. COLUMN WILL BE INSTALLED INTO THE BODY AFTER BODY DROP OR THE COLUMN MAY BE CARRIED IN THE BODY PRIOR TO BODY DROP, SUPPORTED PROPERLY, BUT NOT ATTACHED TO DASH PANEL, AND STUDS MUST NOT BE ENGAGED IN CAPSULES.
2. POSITION COLUMN IN THE BODY AND POSITION THE FLANGE TO THE RAG JOINT AND INSTALL LOCK WASHERS AND NUTS. WITH LOOSE RAG JOINT FLANGE, INSTALL BOLT (K). (MAY BE TIGHTENED TO SPECIFIED TORQUE AT ANY TIME.)
3. LOOSE ASSEMBLE NUTS (F) AT THE INSTRUMENT PANEL.
4. POSITION OUTER COVER TO DASH AND START SCREW (Q).
5. INSTALL SCREW (L) AND TIGHTEN TO SPECIFIED TORQUE. TIGHTEN SCREW (Q) TO SPECIFIED TORQUE AND INSTALL SCREW (R) TO SPECIFIED TORQUE.
6. TIGHTEN TWO CLAMP SCREWS (C) TO SPECIFIED TORQUE.
7. INSTALL TWO INNER COVER SCREWS (J) AND TIGHTEN TO SPECIFIED TORQUE.
8. TIGHTEN TWO NUTS (F) TO THE SPECIFIED TORQUE.
9. INSERT THE WEDGE (G) TO THE DISTANCE REQUIRED TO FILL THE GAP. DO NOT FORCE WEDGE BEYOND THIS POINT. WEDGE MUST BE PARALLEL TO COLUMN CENTERLINE WITHIN 5° AS SHOWN.
10. HOLDING THE WEDGE ON POSITION, INSTALL THE FORWARD MAST JACKET BRACKET BOLT (H) AND TIGHTEN TO THE SPECIFIED TORQUE.
11. (TILT COLUMNS ONLY) INSTALL SCREW (N) AND TIGHTEN.

III. MANDATORY SYSTEM REQUIREMENTS

(a) POT JOINT OPERATING ANGLE MUST NOT EXCEED 5°.

(b) RAG JOINT MUST NOT BE DISTORTED DUE TO POT JOINT BOTTOMING IN EITHER DIRECTION.

(c) MINIMUM CLEARANCE:

1. UPPER CONTROL ARM SHAFT TO STEERING SHAFT IS 0.12".
2. ENGINE TO POT JOINT IS 0.37".
3. CLUTCH LINKAGE TO POT JOINT IS 0.75".

1384104

DATE	SYM.	REVISION RECORD	AUTH.	DR.	CK.
6-1-67	A	X REMOVED		DM	
10-17-67	B	DOCUMENTATION REQUIRED ADDED			CH

1384104

DO NOT SCALE — REPORT ERRORS
TOLERANCES UNLESS OTHERWISE SPECIFIED
± ALLOWED ON TWO PLACE DECIMALS
± .010 ALLOWED ON THREE PLACE DECIMALS
COMMERCIAL TOLERANCES APPLY TO STANDARD PARTS - ROLLED SECTIONS - SHEET METAL GAGES - DRILLED AND PUNCHED HOLES.
BURR ALL DRILLED HOLES. COUNTERSINK ALL TAPPED HOLES .030 X 90°.

DWG. DATE	SCALE —W—	DR. P. PLAMONDON
		CK.
FIRST USED 1968 - A		APPR.
REFERENCE		APPR.
		APPR.
MATERIAL SPEC.		

NAME: STEERING COLUMN INSTALLATION

PART NO.	PAGE NO.
1384104 SHEET 2 OF 2 SHEETS	9-5.2

Ⓑ DOCUMENTATION REQUIRED

V3P557

DAVE GRAHAM INC. - 2015
ALL RIGHTS RESERVED

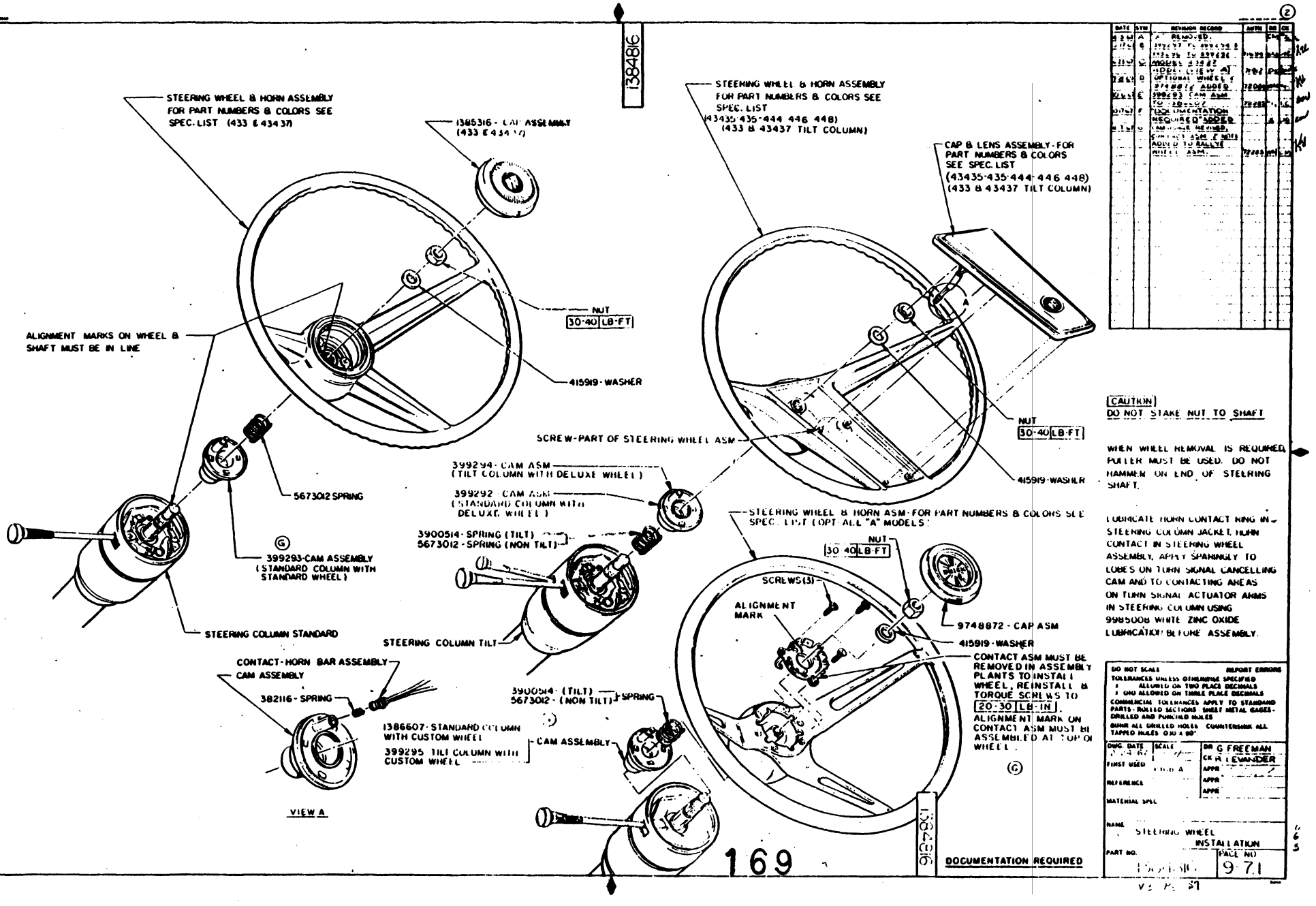

DAVE GRAHAM INC. - 2015
ALL RIGHTS RESERVED

	PAGES
Wheel Covers (Pictorial)	10-1.1
Tires Size - Chart	10-1.2
Wheels & Tires Balancing Information	10-2.1
Spare Wheel - Jack and Jack Instruction Label Installation (Except Wagons) Includes Spare Tire Cover for specific models	10-3.1
Spare Wheel - Jack-Spare Tire Cover and Jack Instruction Label - Installations, (Wagons) (tire cover furnished by Fisher)	10-3.2

PAGES

NOTE: Hub Caps & Wheel Covers are to be packaged and placed in rear compartment for Dealer Installation.

DAVE GRAHAM INC. - 2015
ALL RIGHTS RESERVED

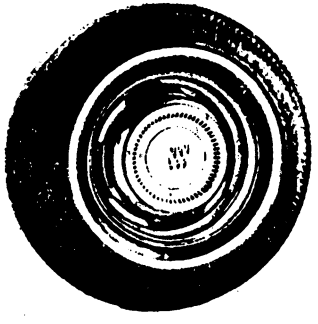

· SPECIAL DELUXE ·
SKYLARK · SKYLARK CUSTOM
G.S. 350 · G. S. 400 · SPORTWAGON



SPECIAL DELUXE · G S 350
G.S. 400 · SPORTWAGON

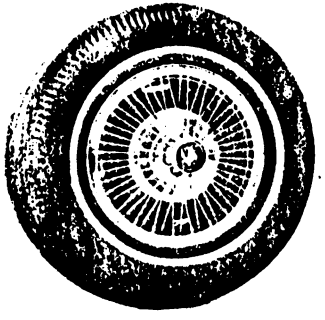

G S 400 · SPORTWAGON · G.S. 350



SPECIAL DELUXE · G.S. 350
G.S. 400 · SPORTWAGON

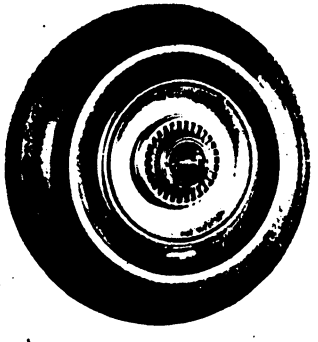

SKYLARK · SKYLARK CUSTOM



SKYLARK · SKYLARK CUSTOM

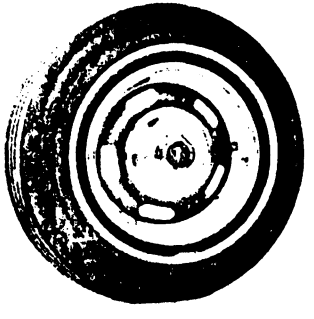

SPECIAL DELUXE · SKYLARK ·
SKYLARK CUSTOM ·
G S 400-SPORTWAGON · G.S. 350

PART NUMBER- 1383770
PAGE NUMBER- 10-1.1

DAVE GRAHAM INC. - 2015
ALL RIGHTS RESERVED

DAVE GRAHAM INC. - 2015
ALL RIGHTS RESERVED

1385836

SERIES	DOMESTIC OR EXPORT OPTIONS															EXPORT OPTIONS ONLY				
	BASIC SIZE						OVERSIZE TIRE				RADIAL PLY	HEAVY DUTY	TIRE & WHEEL ASM 15°			BASIC SIZE			OVERSIZE	
	WALL COLOR	STD.	WHITE			RED		WHITE	BLACK		WHITE	WHITE	BLACK	WHITE		WHITE	RED		WHITE	
	OPTION CODE	TIRE	PW-1	P-26	PV-1	PV-2	PW-2	● P-27	● P-28	P-29	P-30	● P-33	PE-1	N-77	N-78	P-16	PV-2	● PW-2	● P-37	P-38
43327-69 43537-69 44437-39-67-69		A	---	B	---	---	---	E	D	---	---	L	---	M	N	C	---	K	F	---
(R) 43435		A	---	B	---	---	---	---	---	D	E	L	---	----	----	C	---	---	---	F
43437		A	J	B	---	---	K	---	---	D	E	L	---	M	N	C	---	K	---	F
44437-67		B	J	---	---	---	K	---	---	D	E	L	---	M	N	C	---	---	---	F
44435-44855		D	---	E	---	---	---	---	---	G	H	L	---	---	---	F	---	---	---	AA
44465-44865		G	---	H	---	---	---	---	---	---	----	-----	AB	---	---	AA	---	---	---	---
45287-39-69 45487-39-67-69 46487-39-69 46687-39-67		P	---	R	---	--	---	---	---	U	V	Z	---	---	---	T	Y	---	---	W
48257-39-69 48457-39-67-69		U	---	V	---	---	---	---	---	---	---	Z	---	---	---	W	---	---	---	---
49487		P	---	S (3)	---	---	---	---	---	---	---	Z	---	---	---	T	Y	---	---	-
49487 G. S.		S (3)	---	---	X	Y	---	---	---	---	---	Z	---	---	---	---	---	---	--	--

TIRE SIZE	CODE	COLOR	TIRE UNIT PART NUMBERS				PLY	
			UNIROYAL	FIRESTONE	GOODRICH	GOODYEAR	ACTUAL	RATING
7.75 x 14	A	BLACK	3908481	3937862	3908883	3908882	2	4
	H	WHITE	3908891	3937864	3908893	3908892		
	C	WHITE	---	3843520	---	---	4	4
	AC	BLACK	---------	3867577	----------	-------	4	4
8.25 x 14	D	BLACK	397401	397402	397403	397404	2	4
	E	WHITE	397406	397407	397408	397409		
	F	WHITE	---	392111	---	---	4	4
8.55 x 14	G	BLACK	397416	403282	397418	397419	2	4
	H	WHITE	397421	403283	397423	397424		
	AA	WHITE	---	392106	---	---	4	4
	AB	WHITE	394192	---	394193	---	4	8
F-70-14	J	WHITE	---	3925202	---	3908683	2	4
	K	RED	---	3925200	---	3908673		
2058-14	L	WHITE	398825		398827	398828	2 + 4	4
7.75 x 15	M	BLACK	3868103	3868101	3868105	3868107	2	4
	N	WHITE	3883561	3883562	3883563	3883562		
8.45 x 15	P	BLACK	1382299	1381530	1382296	1381532	2	4
	R	WHITE	1382226	1381538	1382275	1381540		
	S	WHITE	1382279	1381548	---	1381549		
	T	WHITE	---	1361069	---	---	4	4
8.85 x 15	U	BLACK	1382297	1382298	1382299	1381553	2	4
	V	WHITE	1382226	1382271	1382278	1381557		
	W	WHITE	---	1361070	---	---	4	4
H-70-15	X	WHITE	---	9708559	---	9777910	2	4
	Y	RED	---	9777772	---	9777909		
225R-15	Z	WHITE	1383502		1383503	1383504	2 + 4	4

DATE	SYM	REVISION RECORD	AUTH	DR	CK
8-1-67	A	X Removed			
8-29-67	B	394192, 392106, 394193 & Data Added	71940		
9-14-67	C	Note & Symbol Removed. Black 5/8 in Std. Tire			
		"S" Color Codeword Added	72077		
9-17-67	D	Note & Symbol Removed & "S" Added	71630		
9-18-67	E	As Auth'd			
9-28-67	F	W 43 Lr PE-1			
1-1-68	G	White to Black			
2-26-68	H	1383729 added to E & A 15	72677		
3-21-68	J	Whitewall Tire Added to 46637-69	72838		
3-11-68	K	3908881 to 3908882 & 3908883 to 3908884	72862		
3-19-68	L	W 43 Lr PE-1 ADDED TO			
		44437-39-67-69 & EXPORT	73189		
3-11-68	M	Series 43435 Usage Revised & AA Added	72788		
3-28-68	N	3908882 REMOVED FROM 2 58-14 & 1383504 REMOVED FROM 2 + 4 58-15	72871		
2-26-68	P	1 - 11 - 68 AL 3782 & 387422	73001		
3-5-68	R	Series 43435 Usage Revised	73028		
3-5-68	S	3908103 to 3937862 3908104 to 3937864	73041		

CODE "AC" TIRE IS A SPECIAL CAR ORDER USAGE ONLY.

● INCLUDES G.O. WHEEL

AIR CONDITIONED EQUIPPED CARS REQUIRE NO SPECIAL TIRE USAGE.

(3) SPECIAL APPEARANCE WALL (3-STRIPE)

--- INDICATES NOT AVAILABLE

DO NOT SCALE — REPORT ERRORS

TOLERANCES UNLESS OTHERWISE SPECIFIED
X ALLOWED ON TWO PLACE DECIMALS
X.XXX ALLOWED ON THREE PLACE DECIMALS

COMMERCIAL TOLERANCES APPLY TO STANDARD PARTS - ROLLED SECTIONS - SHEET METAL GAGES - DRILLED AND PUNCHED HOLES.

BREAK ALL DRILLED HOLES. COUNTERSINK ALL TAPPED HOLES .030 X 82°

ORIG. DATE	SCALE	DR	P. FLAMONDON
5-22-67	----+----	CK	J. [illegible]
FIRST USED		APPR	
1968 A B C		APPR	
NEXT ASSY		APPR	

MATERIAL SPEC.

NAME

CHART - TIRE USAGE

PART NO. 1385836 | PAGE NO. 10-1.2

1385836

GENERAL INFORMATION

TIRE STORAGE AS RECOMMENDED BY TIRE COMPANIES

The tires should be protected from dirt, water, ozone, oil, heat, weight and distortion. Therefore, the tires should be *sorted in a clean, dry, closed dark and cool room on a smooth, oil-free floor in limited heights of piles.

WATER - Suitable water trap should be installed in air supply line to prevent water entering tire when inflating.

OZONE - Tire storage room must be free from sunlight - direct or indirect - circulating air and draft and free from sparking motors and generators, particularly, or other sources of ozone. If the storage building has windows they should be painted with a sun-resistant green or blue paint. All broken windows should be replaced immediately and painted.

OIL - Care must be taken that the floor is dry and free from oil.

HEAT - Tires should be protected from excessive heat. Temperatures between 32 and 80 are preferable.

STACKING TIRES FOR STORAGE OF SIXTY DAYS OR LESS - Tires should be stacked directly on top of each other with only one size in a pile. Height of non-supported piles must be limited. If more than the bottom tier is used, a second tier should be stepped back so that the bottom tires of the second tier rest on a portion of four piles of tires on the bottom tier. If a third tier is required, tires should be stepped back to rest on a portion of four piles of the middle tier.

DISTORTION - Under no circumstances should tires be stored in laced or hazardous piles, as such arrangements will distort the bead wire. This is particularly detrimental to synthetic tires as they take longer to return to normal shape after being distorted.

*3-20-67

DAVE GRAHAM INC. - 2015
ALL RIGHTS RESERVED

BUICK MOTOR DIVISION
GENERAL MOTORS CORPORATION
FLINT, MICH., U. S. A.

1383073

DATE	SYM.	REVISION RECORD	AUTH.	DR	CK
12-22-64	A	"X" REMOVED		SJ	
3-28-66	B	NOTE ADDED		DB	

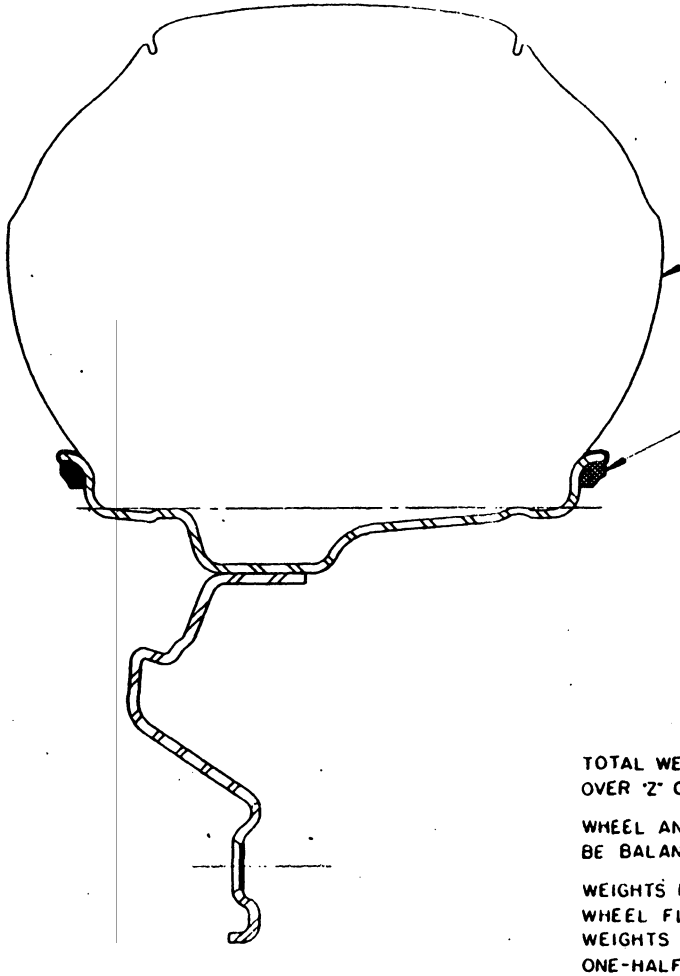

ASSEMBLE BLACK TIRE ON WHEEL WITH SERIAL NUMBER ON THIS SIDE.

FOR BALANCE WEIGHT PART NUMBERS SEE ENGINEERING RELEASES AND WHEEL BALANCE WEIGHT CHART 9421500.

SERIES	OUNCES	
	"Z"	"Y"
A	5	4
B & C	5	4
E	5	2

TOTAL WEIGHTS ON BOTH RIM FLANGES NOT TO BE OVER "Z" OUNCES.

WHEEL AND TIRE ASSEMBLIES FOR ALL SERIES TO BE BALANCED WITHIN "Y" INCH OUNCES.

WEIGHTS MUST BE DIVIDED BETWEEN INNER & OUTER WHEEL FLANGES, WHEN ONE OR MORE OUNCES OF WEIGHTS ARE USED. DIVIDE WEIGHTS TO NEAREST ONE-HALF OUNCE. ON "A" SERIES WHEN USING LESS THAN THREE OUNCES OF WEIGHTS, IT IS PERMISSIBLE TO INSTALL TOTAL AMOUNT ON INSIDE WHEEL FLANGE.

(B) WITH THREE OUNCES OR OVER, DIVIDE WEIGHTS TO NEAREST ONE-HALF OUNCE.

1383073

DO NOT SCALE — REPORT ERRORS

TOLERANCES UNLESS OTHERWISE SPECIFIED
± ALLOWED ON TWO PLACE DECIMALS
± .010 ALLOWED ON THREE PLACE DECIMALS

COMMERCIAL TOLERANCES APPLY TO STANDARD PARTS - ROLLED SECTIONS - SHEET METAL GAGES - DRILLED AND PUNCHED HOLES.

BURR ALL DRILLED HOLES. COUNTERSINK ALL TAPPED HOLES .030 X 90°.

DWG. DATE 9-12-60	SCALE	DR. S. JANCAR
		CK.
FIRST USED 1968 ALL		APPR.
REFERENCE		APPR.
		APPR.
MATERIAL SPEC.		

NAME WHEEL & TIRE BALANCING INFO ASSEMBLY

PART NO.	PAGE NO.
1383073	10-21

VJ P175 25

DAVE GRAHAM INC. - 2015
ALL RIGHTS RESERVED

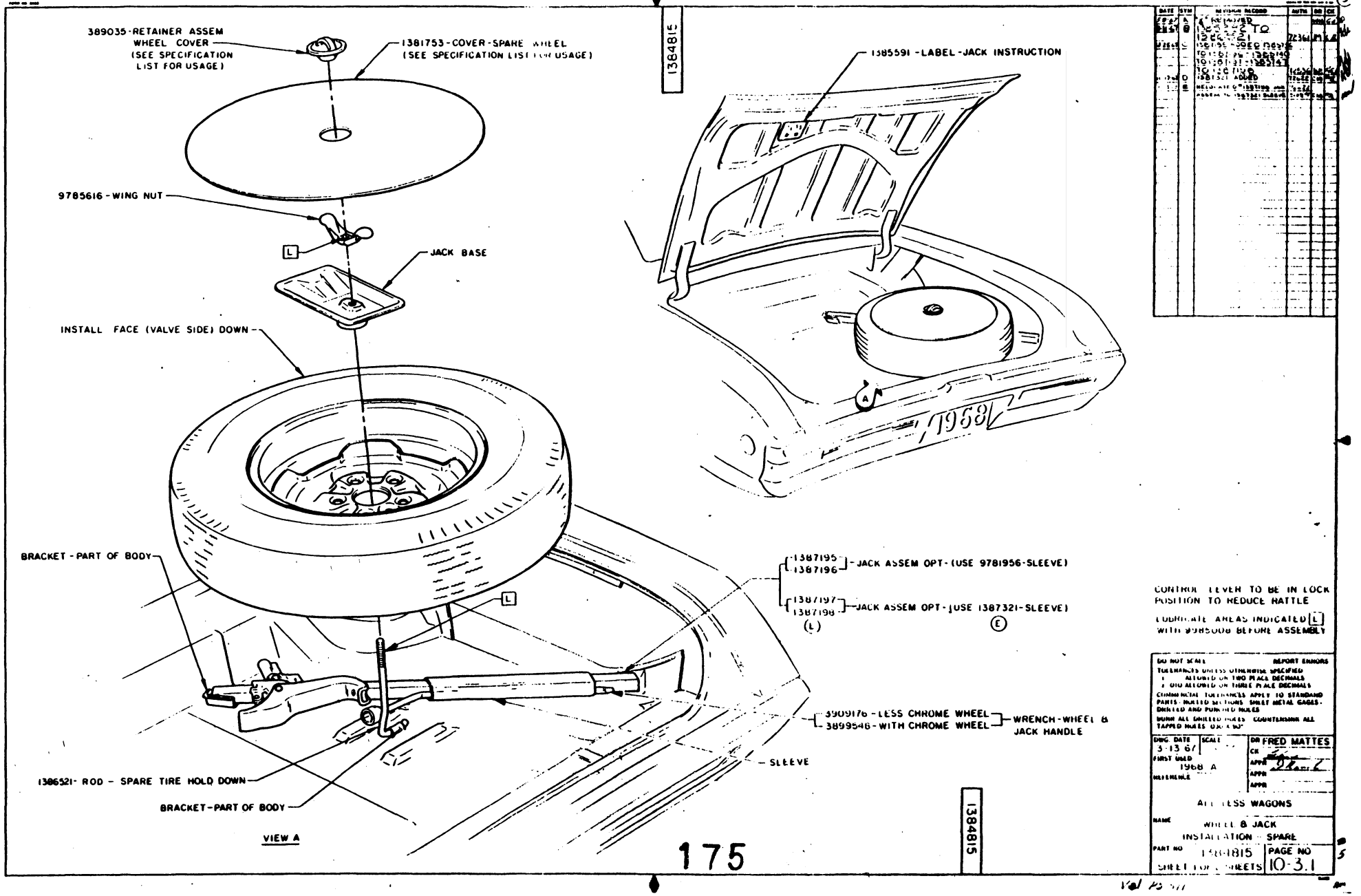

CONTROL LEVER TO BE IN LOCK POSITION TO REDUCE RATTLE

LUBRICATE AREAS INDICATED [L] WITH [illegible] BEFORE ASSEMBLY

DO NOT SCALE — REPORT ERRORS
TOLERANCES UNLESS OTHERWISE SPECIFIED
1 PLACE DEC ±.100
2 PLACE DEC ±.010
3 PLACE DEC ±.005
COMMERCIAL TOLERANCES APPLY TO STANDARD PARTS, ROLLED SECTIONS, SHEET METAL GAGES, DRILLED AND PUNCHED HOLES
BURR ALL DRILLED HOLES, COUNTERSINK ALL TAPPED HOLES 82° X .90"

DWG. DATE 3-13-67	SCALE
FIRST USED 1968 A	DR FRED MATTES
MILEMENLE	CK
	APPR
	APPR
	APPR

ALL LESS WAGONS

NAME WHEEL & JACK INSTALLATION - SPARE

PART NO 1384815 | PAGE NO 10-3.1

SHEET 1 OF 1 SHEETS

GENERAL MOTORS CORPORATION FLINT, MICH., U.S.A.

DAVE GRAHAM INC. - 2015
ALL RIGHTS RESERVED

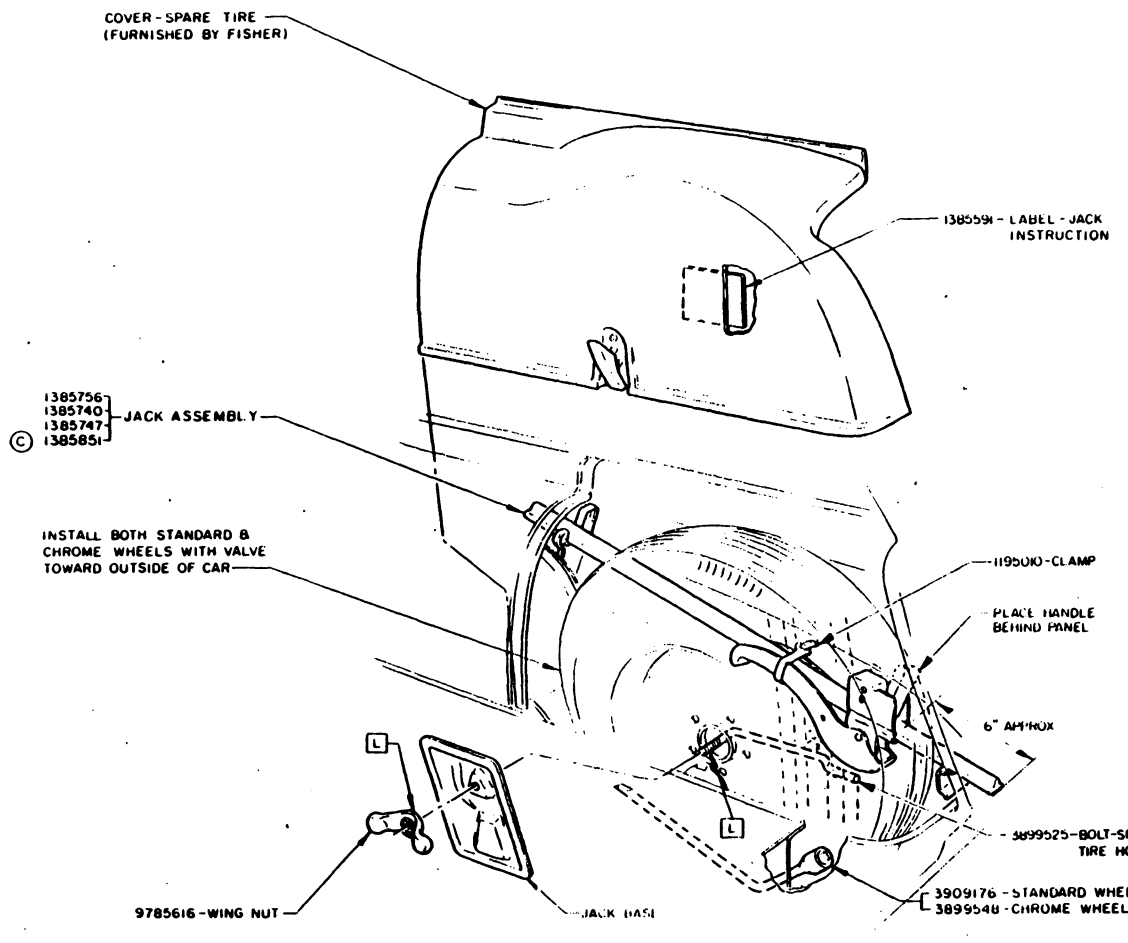

1384815

1384815

CONTROL LEVER TO BE IN LOCK
POSITION TO REDUCE RATTLE

LUBRICATE AREAS INDICATED L
WITH 9985[illegible] BEFORE ASM

DO NOT SCALE — REPORT ERRORS
TOLERANCES UNLESS OTHERWISE SPECIFIED
± ALLOWED ON TWO PLACE DECIMALS
± .010 ALLOWED ON THREE PLACE DECIMALS
COMMERCIAL TOLERANCES APPLY TO STANDARD PARTS - ROLLED SECTIONS SHEET METAL GAGES - DRILLED AND PUNCHED HOLES
BURN ALL DRILLED HOLES COUNTERSINK ALL TAPPED HOLES .030 X 90°

DWG DATE 3-13-67	SCALE	DR FRED MATTES
FIRST USED 1968		CK
REFERENCE		APPR
		APPR
		APPR

STATION WAGONS

NAME WHEEL & JACK INSTALLATION-SPARE

PART NO 1384815 — PAGE NO 10-3.2

SHEET 2 OF 2 SHEETS

GENERAL MOTORS CORPORATION
FLINT, MICH., U.S.A.

DAVE GRAHAM INC. - 2015
ALL RIGHTS RESERVED

5-4-67

1968 WHEEL CHART

SIZE	TYPE	PART No.	FINISH	STATUS
14 X 5.00	REGULAR	323178	primed	
less J52	KH - MW - NI	3869449	silver	
14 X 6.00	REGULAR	3871919	primed	
less J52	KH - MW - NI	1373846	silver	
14 X 6.00	Disc. Brake	9791450	primed	new
(grey primer)	(REG.) KH	9792462	silver	new
14X6.00	RALLY KH	3918078	primed	new
ok (J52)		3917538	silver	new
14 X 6.00 (no J52)	Chrome MW	1384134		new
X6.00 (no J52)	Reg. "A" MW	386239		
15X6.00	REGULAR B-C-E KH - MW - NI	1385419	primed	new
15X6.00	Chrome MW	1383421		new
15X6.00	Heavy Duty KH	1385352	primed	new
	1362759			

DAVE GRAHAM INC. - 2015
ALL RIGHTS RESERVED

Wheel Codes - 1968

A -

14 x 5	(chrome)	Y	1384134
14 x 5	(std.)	5	383178
14 x 6 (grey primer)	(hvy duty)	6	3871919
14 x 6	(disc)	D	9491450
14 x 6	(rally)	S	3918078
15 x 6	(S.C.O.)	X	1385352

B

15 x 6	(std.)	W	1383419

178

DAVE GRAHAM INC. - 2015
ALL RIGHTS RESERVED

VEHICLE CAPACITY—6 OCCUPANTS
(3 FRONT AND 3 REAR) PLUS 200 LBS. LUGGAGE
TOTAL FULL RATED LOAD = 1100 LBS.

TIRE SIZE
LESABRE—WILDCAT—RIVIERA
8.45 X 15, 4 PLY RATING
ELECTRA—8.85 X 15, 4 PLY RATING

TIRE PRESSURE

STD. INFLATION FOR ALL LOADS (1100 LBS. MAX.)		OPT. INFLATION FOR LIGHT LOADS (750 LBS. MAX.)	
FRONT	REAR	FRONT	REAR
24 PSI COLD 30 PSI HOT	26 PSI COLD 32 PSI HOT	24 PSI COLD 30 PSI HOT	24 PSI COLD 30 PSI HOT

SEE OWNERS GUIDE FOR ADDITIONAL INFORMATION

1385551

VEHICLE CAPACITY—6 OCCUPANTS
(3 FRT. & 3 SECOND SEAT) PLUS 300 LBS. CARGO LOAD
8 OCCUPANTS (3 FRT. & 3 SECOND AND 2 THIRD SEAT)
TOTAL FULL RATED LOAD = 1200 LBS.

TIRE SIZE
SPECIAL WAGON—7.75 X 14, 4 PLY RATING
SPORTWAGON 2 SEAT—8.25 X 14, 4 PLY RATING
SPORTWAGON 3 SEAT—8.55 X 14, 4 PLY RATING

TIRE PRESSURE

STD. INFLATION FOR ALL LOADS (1200 LBS. MAX.)		OPT. INFLATION FOR LIGHT LOADS (750 LBS. MAX.)	
FRONT	REAR	FRONT	REAR
26 PSI COLD 32 PSI HOT	32 PSI COLD 38 PSI HOT	24 PSI COLD 30 PSI HOT	28 PSI COLD 34 PSI HOT

SEE OWNERS GUIDE FOR ADDITIONAL INFORMATION

1385552

VEHICLE CAPACITY—6 OCCUPANTS
(3 FRONT AND 3 REAR) PLUS 200 LBS. LUGGAGE
TOTAL FULL RATED LOAD = 1100 LBS.

TIRE SIZE
SPECIAL & SKYLARK—7.75 X 14, 4 PLY RATING

TIRE PRESSURE

STD. INFLATION FOR ALL LOADS (1100 LBS. MAX.)		OPT. INFLATION FOR LIGHT LOADS (750 LBS. MAX.)	
FRONT	REAR	FRONT	REAR
24 PSI COLD 30 PSI HOT	26 PSI COLD 32 PSI HOT	24 PSI COLD 30 PSI HOT	24 PSI COLD 30 PSI HOT

SEE OWNERS GUIDE FOR ADDITIONAL INFORMATION

1385549

VEHICLE CAPACITY—6 OCCUPANTS
(3 FRONT AND 3 REAR) PLUS 200 LBS. LUGGAGE
TOTAL FULL RATED LOAD = 1100 LBS.

TIRE SIZE
G.S. 400-F 70 X 14, 4-PLY RATING.

TIRE PRESSURE

STD. INFLATION FOR ALL LOADS (1100 LBS. MAX.)
26 PSI COLD 32 PSI HOT

SEE OWNERS GUIDE FOR ADDITIONAL INFORMATION

1385550

DAVE GRAHAM INC. - 2015
ALL RIGHTS RESERVED

1967 TIRE SIZES

OE Size	Load at 24 psi	Wide Oval	Load at 24 psi	Radial Ply	Load at 24 psi
7.00-13	1080#	D70-13	1110#	185R13	1080#
6.95-14	1050#	D70-14	1120#	175R14	1050#
7.35-14	1160#	E70-14	1190#	185R14	1160#
7.75-14	1270#	F70-14	1280#	195R14	1270#
8.25-14	1380#	G70-14	1380#	205R14	1380#
8.55-14	1510#	H70-14	1510#	215R14	1510#
8.85-14	1580#	J70-14	1580#	225R14	1580#

DAVE GRAHAM INC. - 2015
ALL RIGHTS RESERVED

1968 BUICK ASSEMBLY INSTRUCTION MANUAL

SPECIAL - SKYLARK 43000 - 44000 SERIES

SHEET METAL - FRONT END - RADIATOR & GRILLE (SECTION 11)

	PAGES
Front Fender & Wheelhouse Panel Installations - Hood Bumpers & Special Paint Requirements	11-2.1 thru 11-2.2
F. Fender Installations to Shroud & Rocker Panel & Shim Requirements	11-2.3
F. Fender Moldings - Ornaments & Name Plate Installations	11-2.4 11-2.5
Hood Installations - Buick Letters Center Molding - & G.S. Insert Assembly	11-3.1
Hood Installations - Insulator Pad & Cement Requirements - Adjustable Hood Bumper - Hood Hinge & Spring	11-3.2
Radiator Grille & Front End Install. Upper & Center Support - Headlamp Door - Grille - Ornament & Horn - Hoodlatch Assembly Headlamp Door & Grille Assembly (2 pages)	11-4.1 11-4.2
Radiator & Grille Installations G.S. & H.D. Fan Shroud - Radiator - Hoses - Support - Upper Mounting Panel Overflow hose to side Baffle & Cooling System Pressure check for leaks.	11-4.3
Radiator Identification Chart	
Heavy Duty Cooling Fan Assembly - Fan Clutch - Water Pump Cover - Radiator - Overflow Inlet & Outlet Hose - Support - Mounting Panel & Insulators	

DAVE GRAHAM INC. - 2015
ALL RIGHTS RESERVED

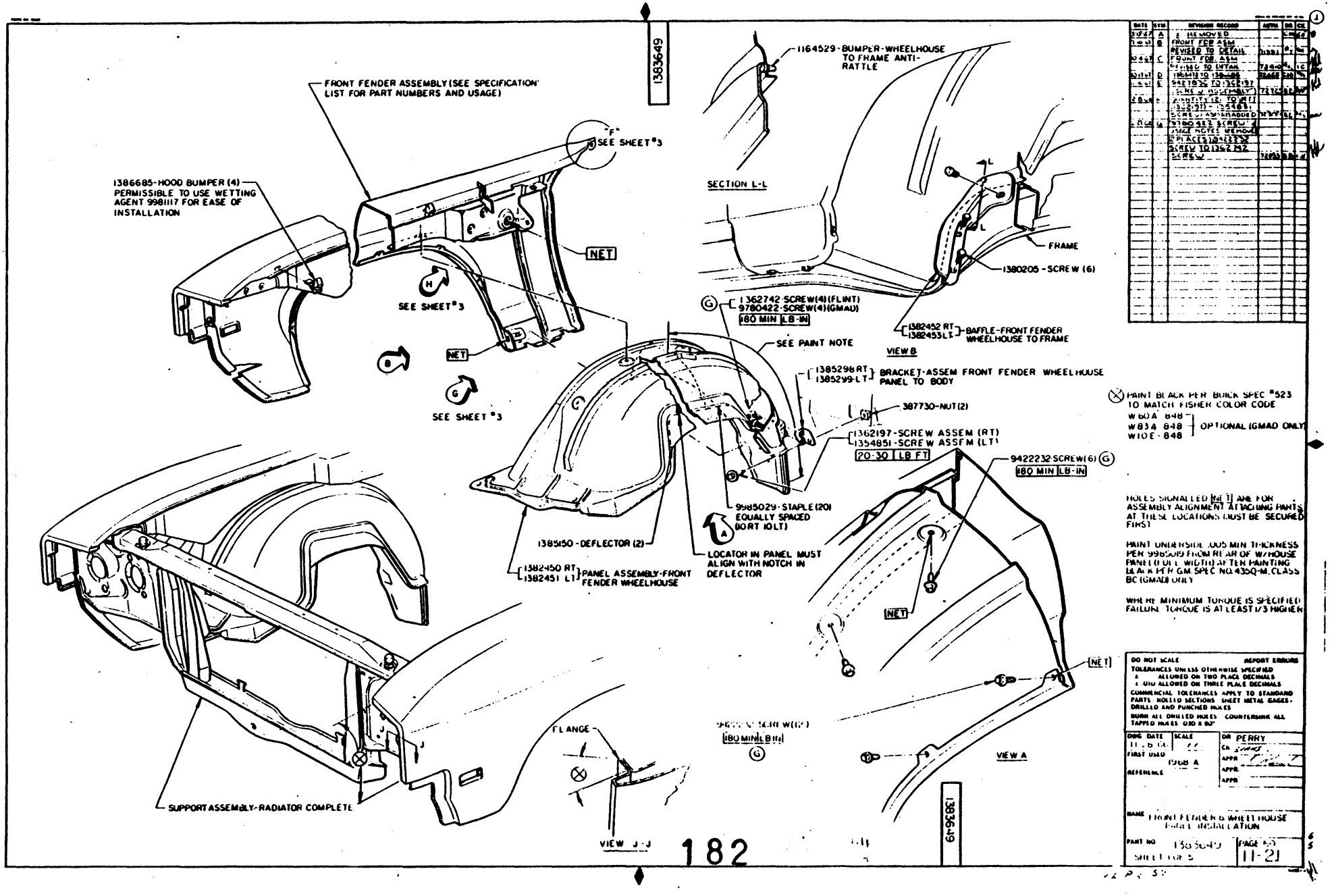

DAVE GRAHAM INC. - 2015
ALL RIGHTS RESERVED

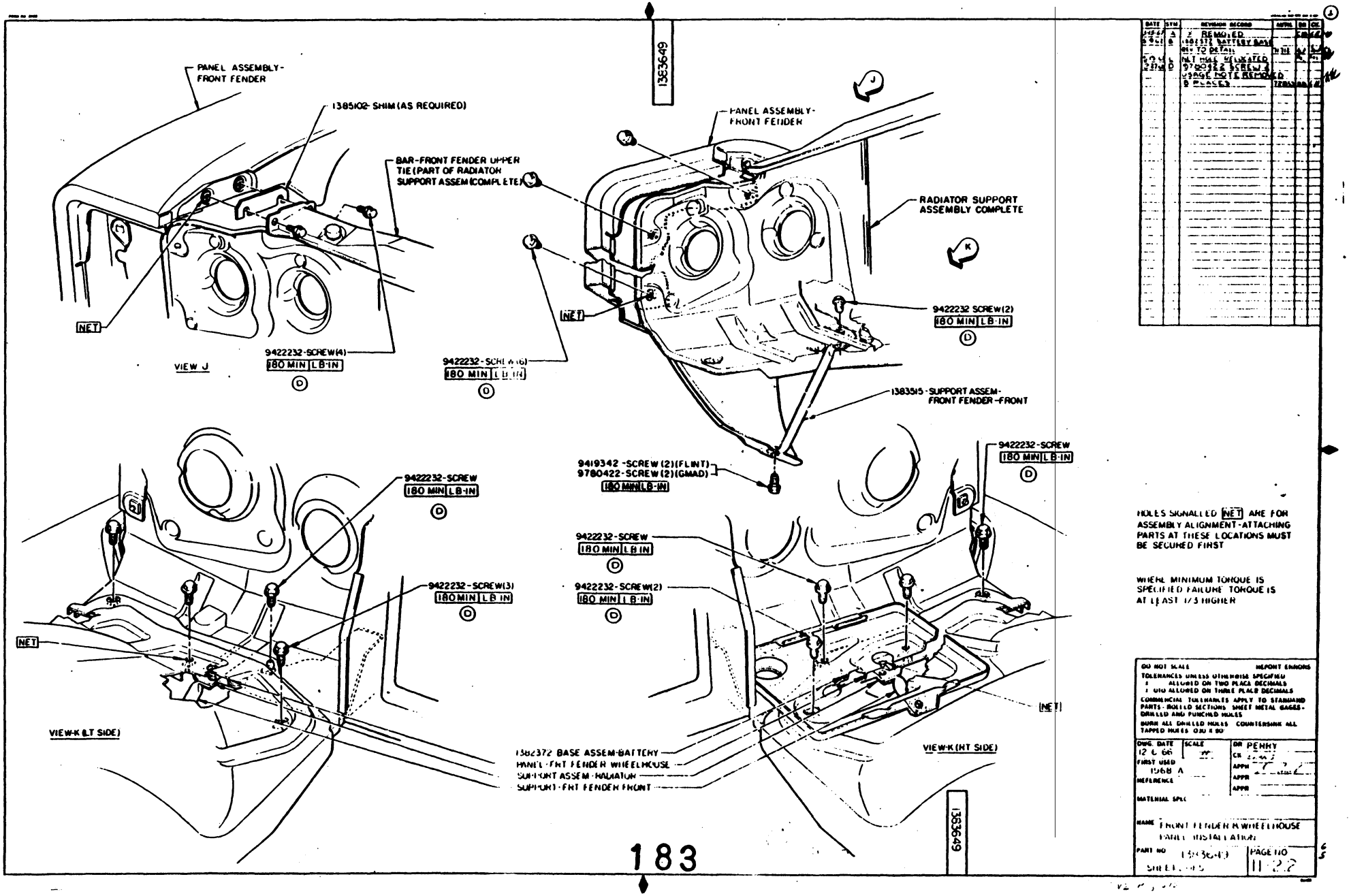

DAVE GRAHAM INC. - 2015
ALL RIGHTS RESERVED

DAVE GRAHAM INC. - 2015
ALL RIGHTS RESERVED

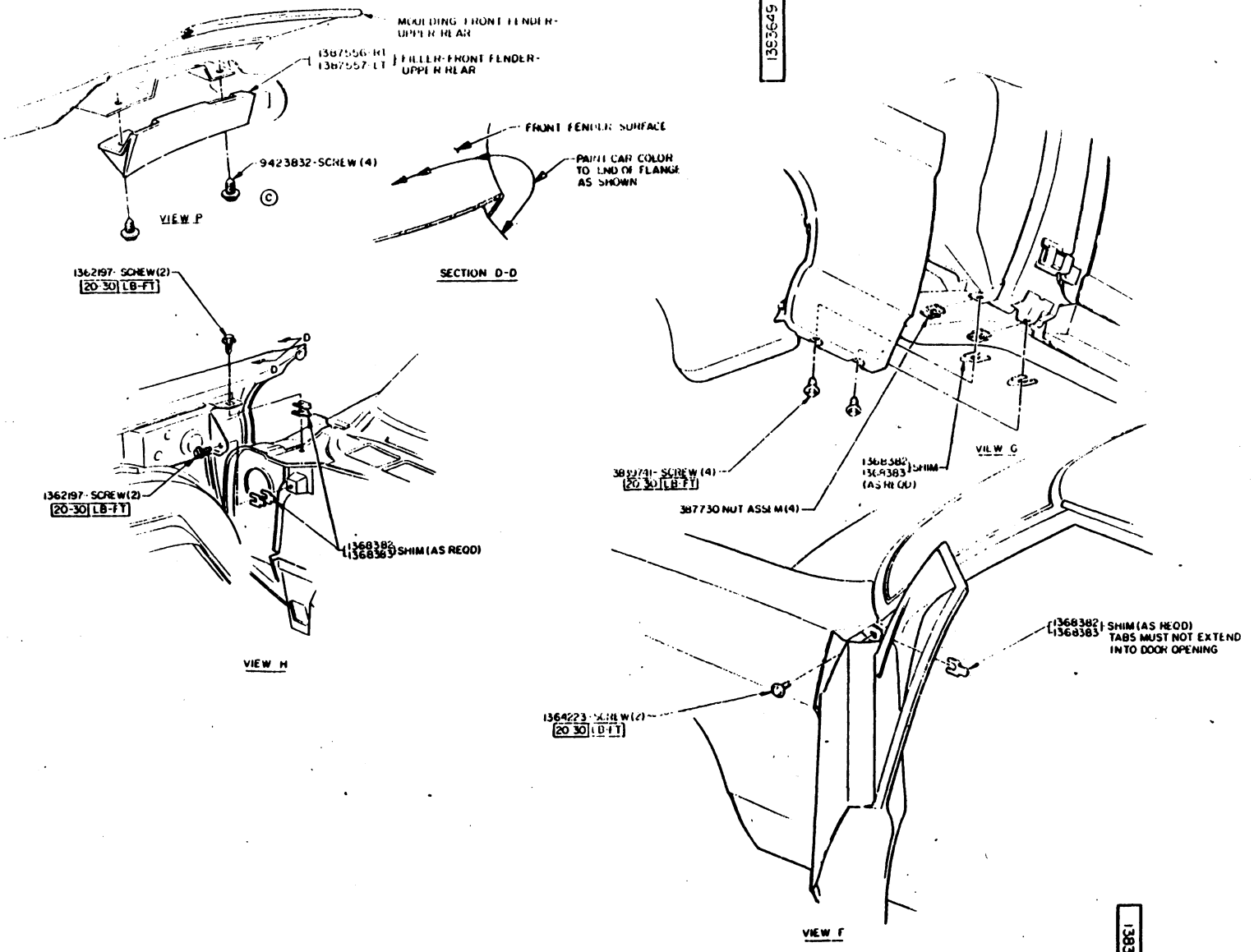

WHERE MINIMUM TORQUE IS SPECIFIED FAILURE TORQUE IS AT LEAST 1/3 HIGHER

DO NOT SCALE — REPORT ERRORS
TOLERANCES UNLESS OTHERWISE SPECIFIED
± ALLOWED ON TWO PLACE DECIMALS
± .010 ALLOWED ON THREE PLACE DECIMALS
COMMERCIAL TOLERANCES APPLY TO STAMPED PARTS ROLLED SECTIONS SHEET METAL GAGES-DRILLED AND PUNCHED HOLES
BURR ALL DRILLED HOLES COUNTERSINK ALL TAPPED HOLES USD X 90°

DWG DATE 12/7/6	SCALE
FIRST USED 1964 A	DR PERRY
REFERENCE	CK
MATERIAL SPEC.	APPR

NAME: FRONT FENDER & WHEELHOUSE INNER INSTALLATION
PART NO. 1363649
SHEET 3 of 5
PAGE NO. 112-3

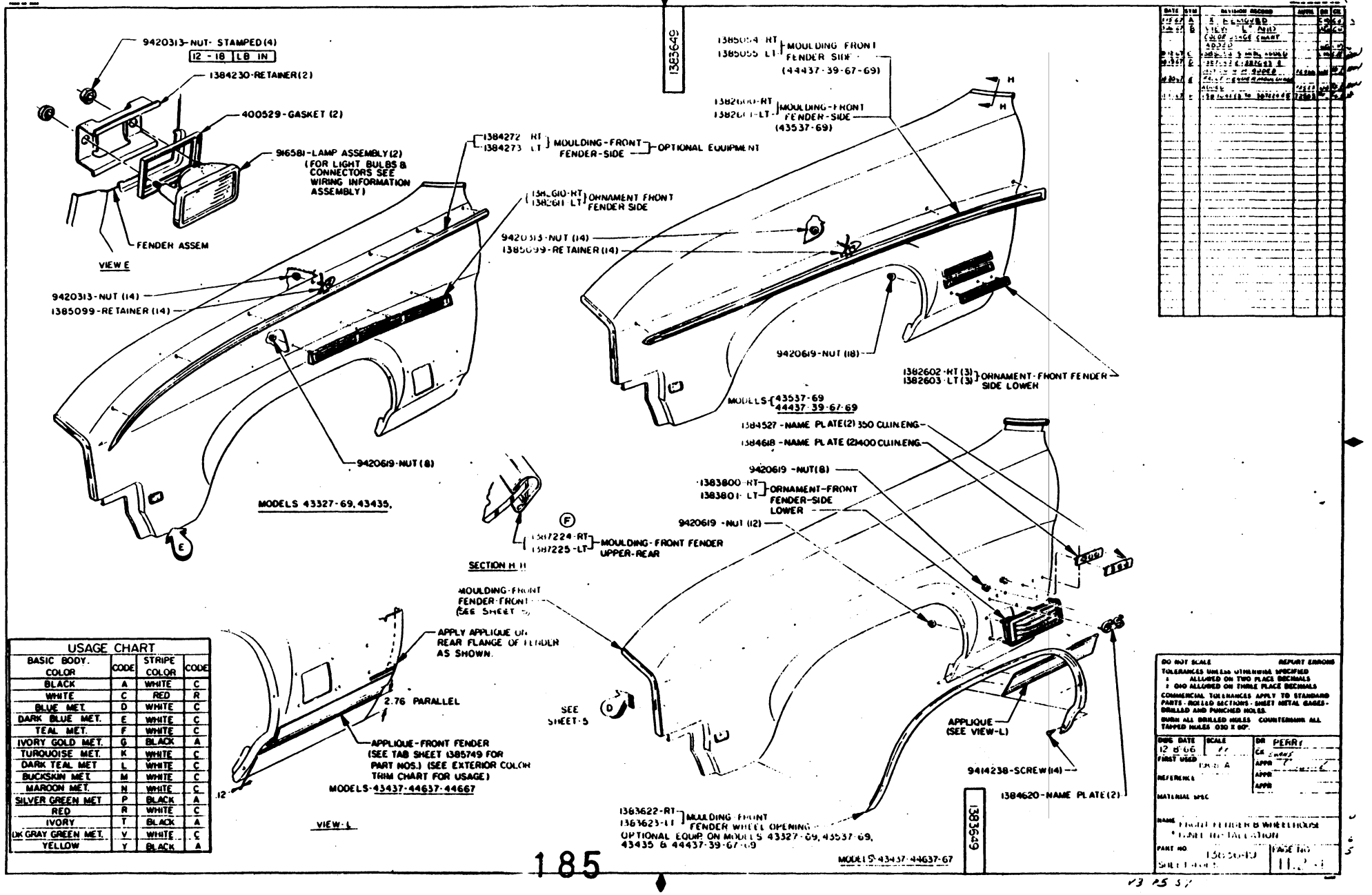

USAGE CHART			
BASIC BODY COLOR	CODE	STRIPE COLOR	CODE
BLACK	A	WHITE	C
WHITE	C	RED	R
BLUE MET.	D	WHITE	C
DARK BLUE MET.	E	WHITE	C
TEAL MET.	F	WHITE	C
IVORY GOLD MET.	G	BLACK	A
TURQUOISE MET.	K	WHITE	C
DARK TEAL MET	L	WHITE	C
BUCKSKIN MET.	M	WHITE	C
MAROON MET.	N	WHITE	C
SILVER GREEN MET	P	BLACK	A
RED	R	WHITE	C
IVORY	T	BLACK	A
DK GRAY GREEN MET.	V	WHITE	C
YELLOW	Y	BLACK	A

DO NOT SCALE — REPORT ERRORS
TOLERANCES UNLESS OTHERWISE SPECIFIED
± ALLOWED ON TWO PLACE DECIMALS
± .010 ALLOWED ON THREE PLACE DECIMALS
COMMERCIAL TOLERANCES APPLY TO STANDARD PARTS - ROLLED SECTIONS - SHEET METAL GAGES - DRILLED AND PUNCHED HOLES.
BURR ALL DRILLED HOLES COUNTERSINK ALL TAPPED HOLES .030 X 80°.

DWG DATE 12 8 66 | SCALE 1/1 | DR PERRY | CK | APPR | APPR | APPR
FIRST USED
REFERENCE
MATERIAL SPEC
NAME FRONT FENDER & WHEELHOUSE SHIELD INSTALLATION
PART NO 1383649 | PAGE NO 11-2-1
SHEET 1 OF 1

DAVE GRAHAM INC. - 2015
ALL RIGHTS RESERVED

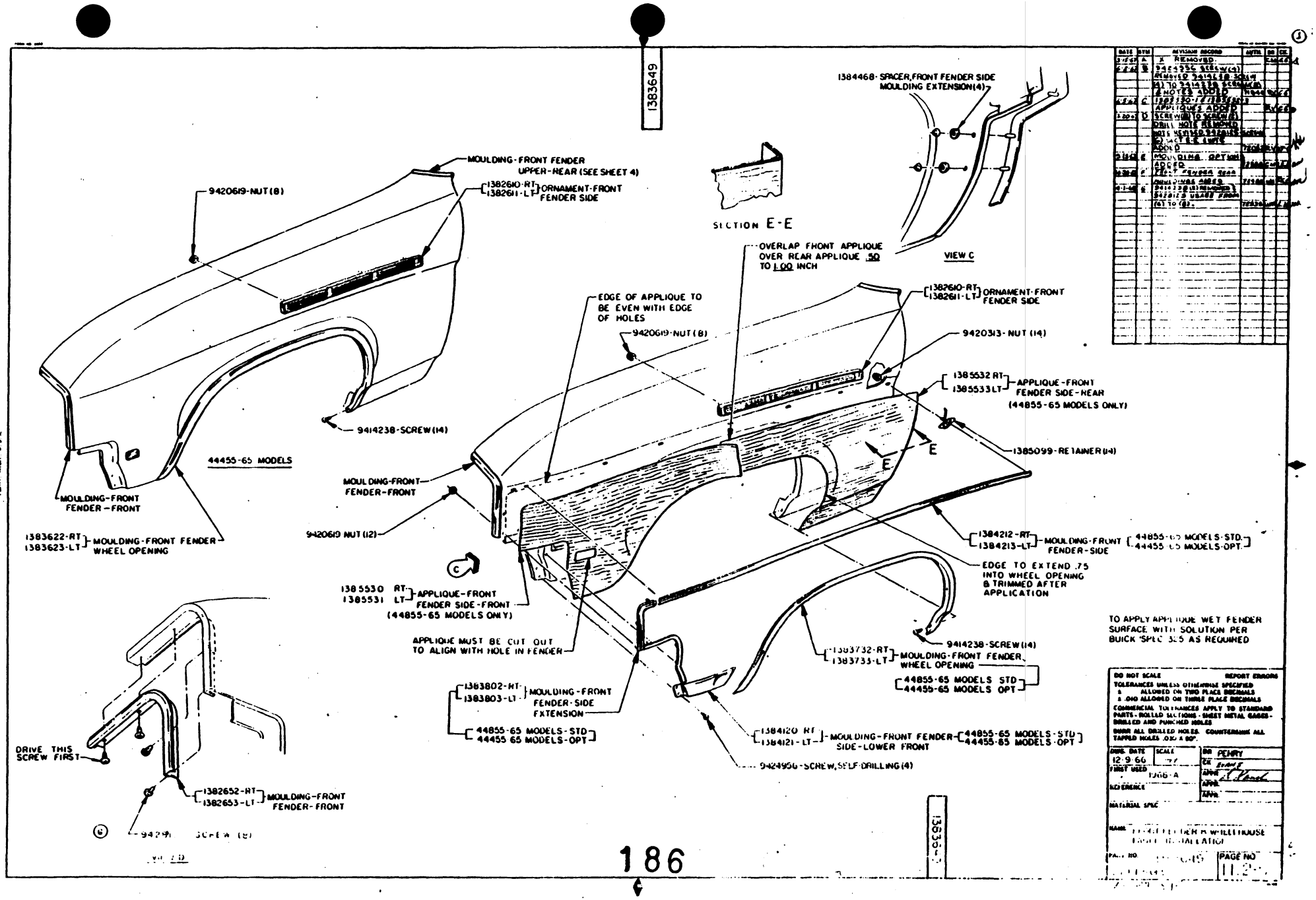

DAVE GRAHAM INC. - 2015
ALL RIGHTS RESERVED

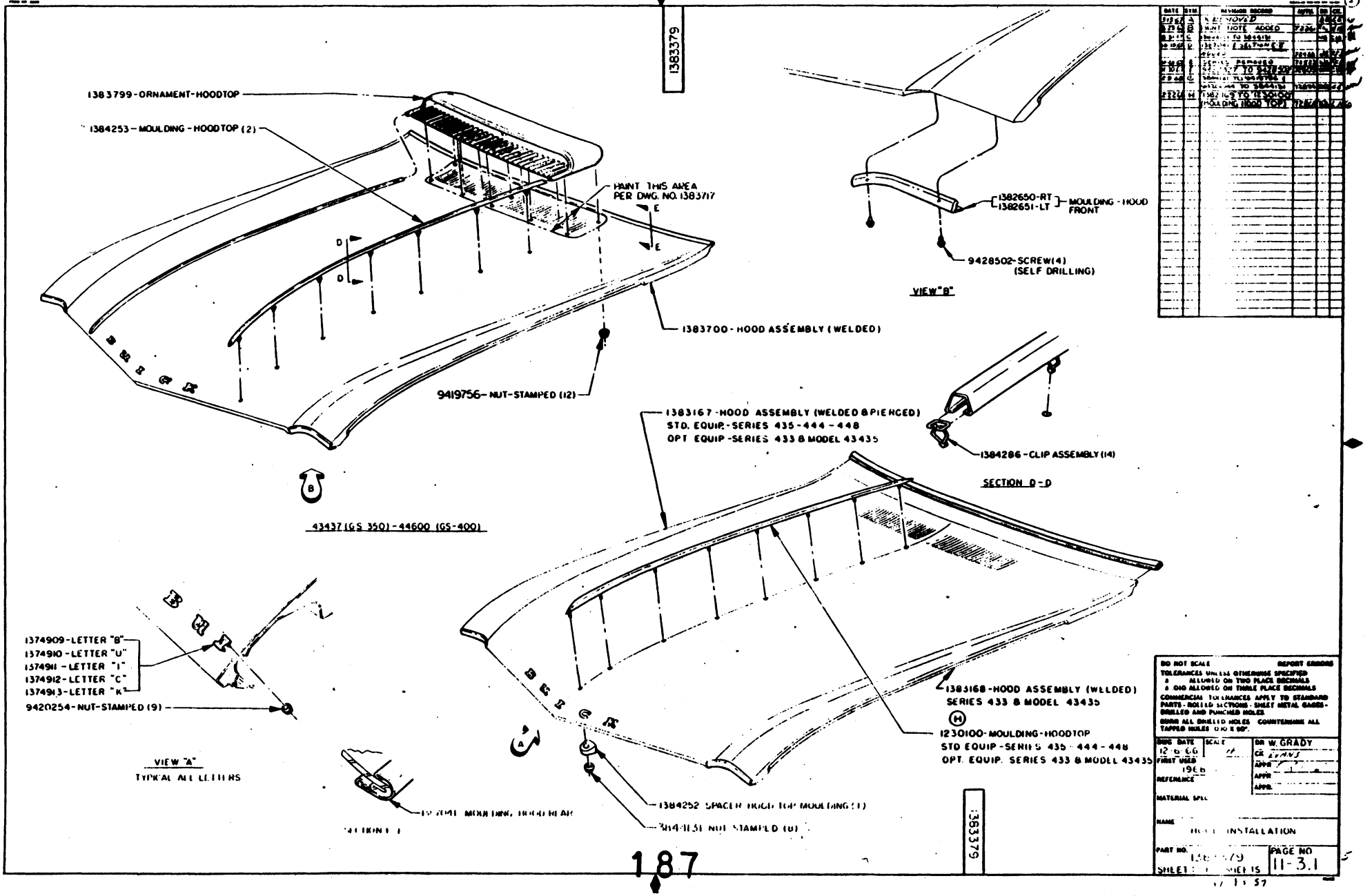

DAVE GRAHAM INC. - 2015
ALL RIGHTS RESERVED

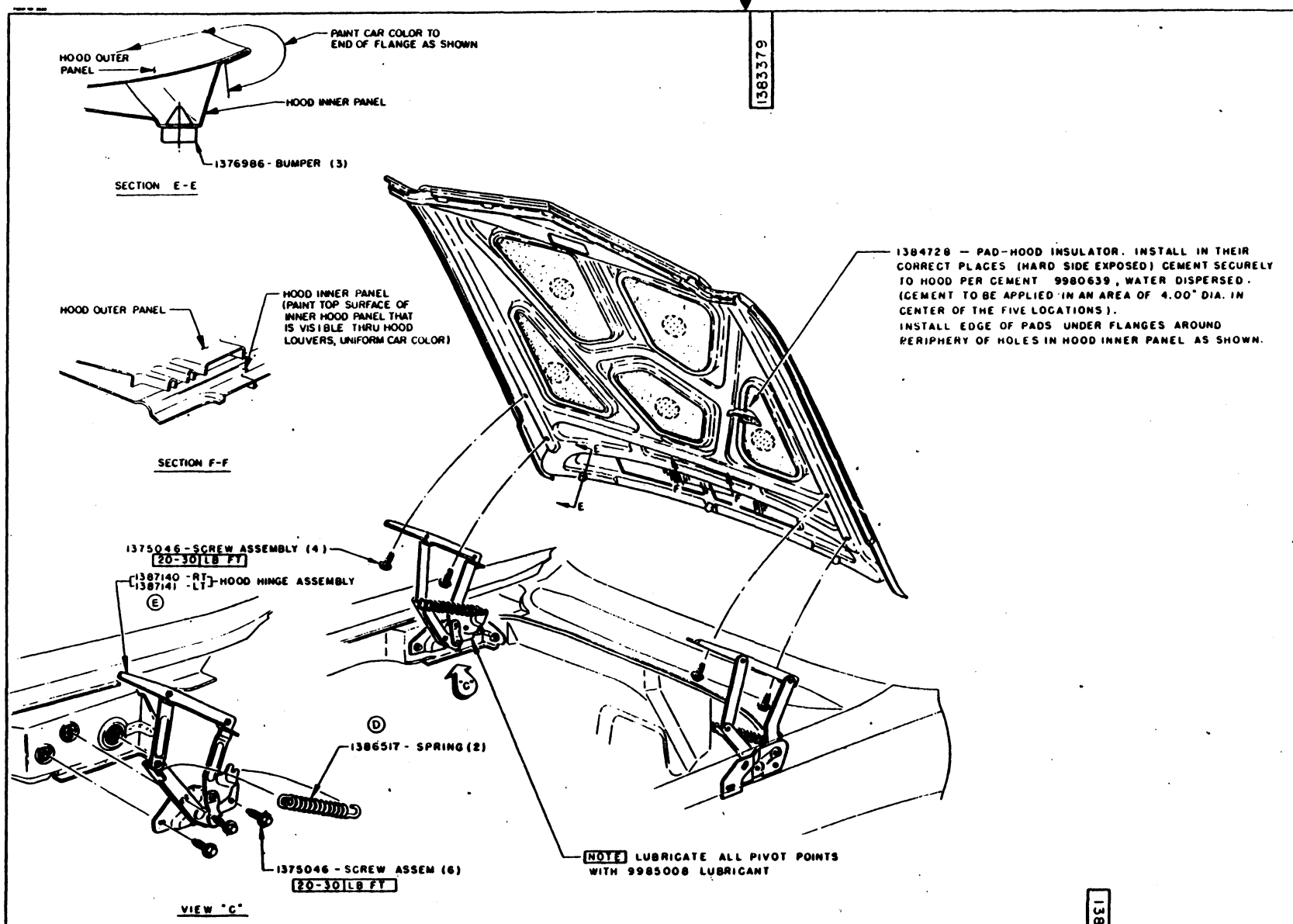

DATE	SYM	REVISION RECORD	APPR	DR	CK
[illegible]	A	[illegible]		[illegible]	[illegible]
[illegible]	B	SECTION F-F & NOTES ADDED		[illegible]	[illegible]
[illegible]	C	1374[illegible] TO 1385[illegible] HINGE ASSEMBLY	[illegible]	[illegible]	[illegible]
[illegible]	D	1385104 TO 1386517	[illegible]	[illegible]	[illegible]
[illegible]	E	1385[illegible] TO 1387140 1385073 TO 1387141	[illegible]	[illegible]	[illegible]

WHERE MIN TORQUE ONLY IS SPECIFIED, FAILURE TORQUE IS AT LEAST 1/3 HIGHER

DO NOT SCALE — REPORT ERRORS
TOLERANCES UNLESS OTHERWISE SPECIFIED
± ALLOWED ON TWO PLACE DECIMALS
± .010 ALLOWED ON THREE PLACE DECIMALS
COMMERCIAL TOLERANCES APPLY TO STANDARD PARTS - ROLLED SECTIONS - SHEET METAL GAGES - DRILLED AND PUNCHED HOLES.
BURR ALL DRILLED HOLES. COUNTERSINK ALL TAPPED HOLES .030 X 80°.

DWG DATE 10-20-66	SCALE [illegible]	DR BORROMEY
FIRST USED 1968	"A"	CK EVANS
REFERENCE		APPR
MATERIAL SPEC		APPR
NAME HOOD INSTALLATION		
PART NO. 1383379 SHEET 2 OF 2 SHEETS		PAGE NO. 11-3.2

V2 P55

BUICK MOTOR DIVISION
GENERAL MOTORS CORPORATION
PLANT, MICH., U.S.A.

DAVE GRAHAM INC. - 2015
ALL RIGHTS RESERVED

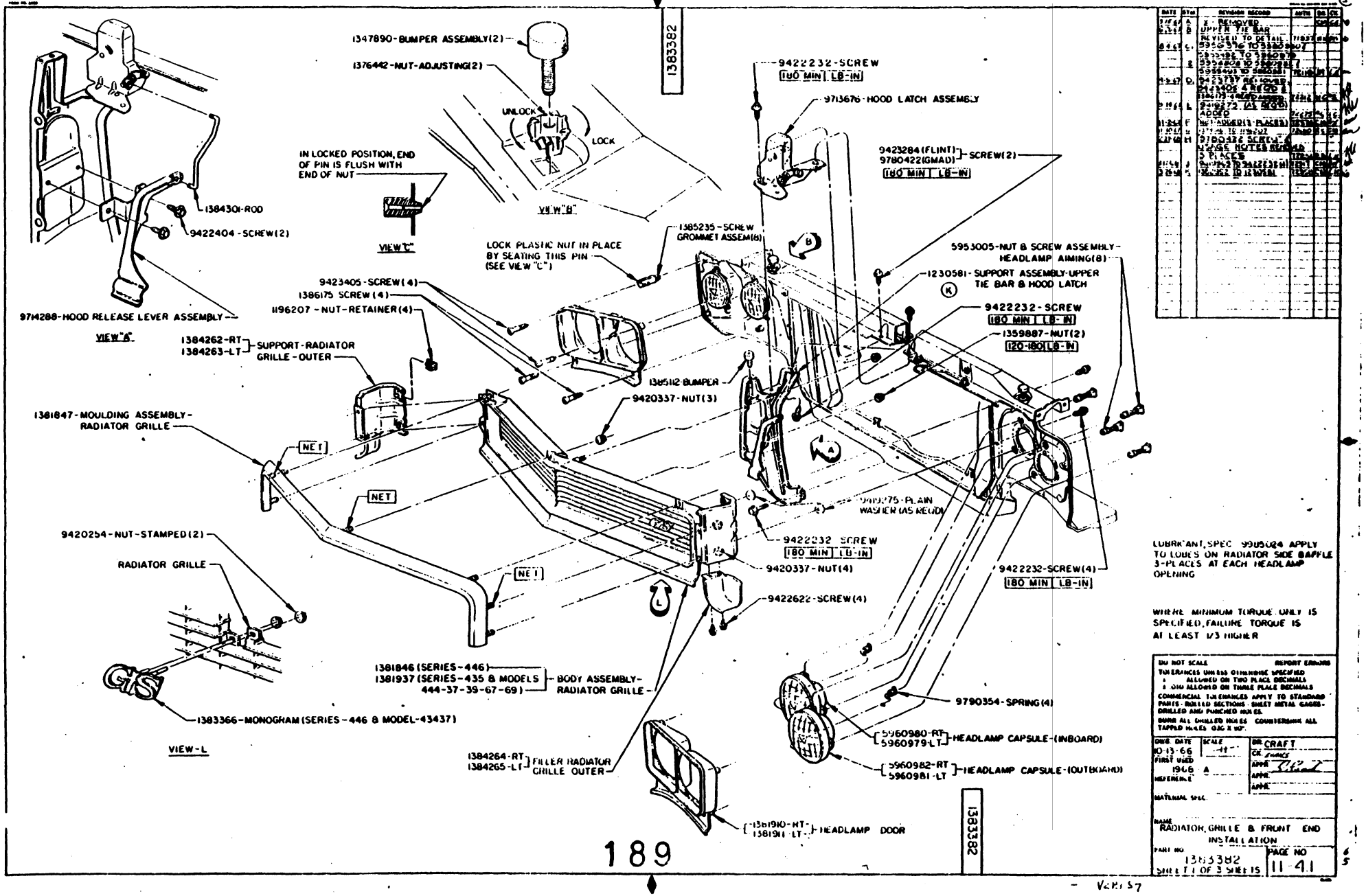

DAVE GRAHAM INC. - 2015
ALL RIGHTS RESERVED

1383382

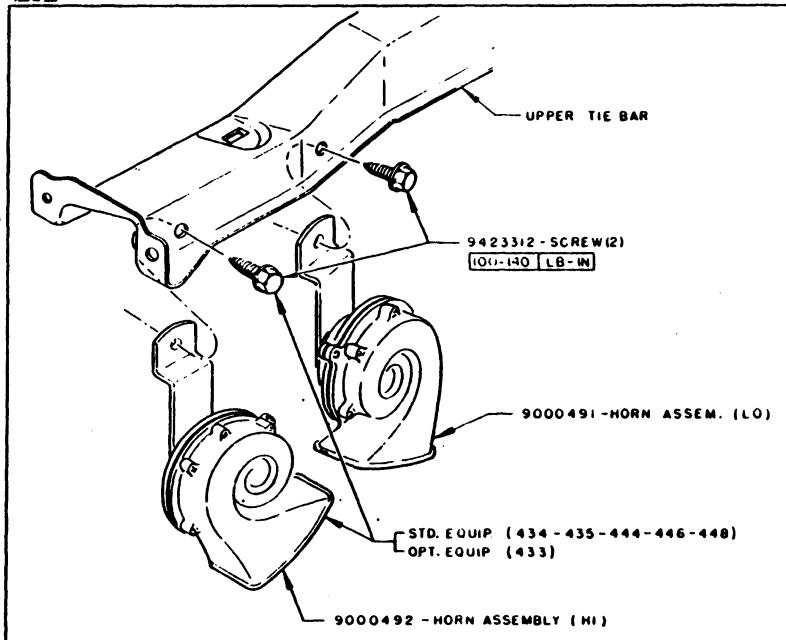

VIEW - K

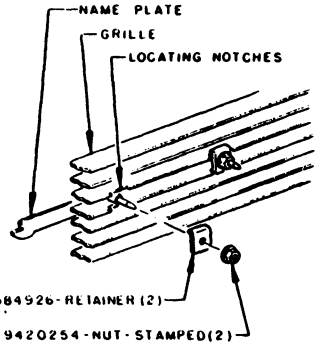

VIEW - J

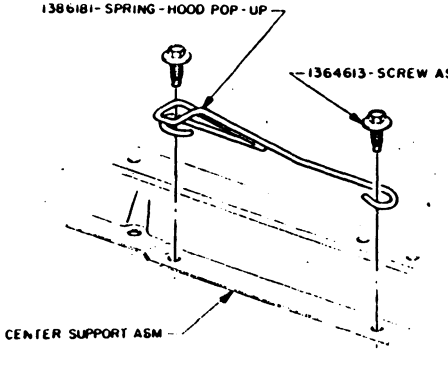

VIEW - M

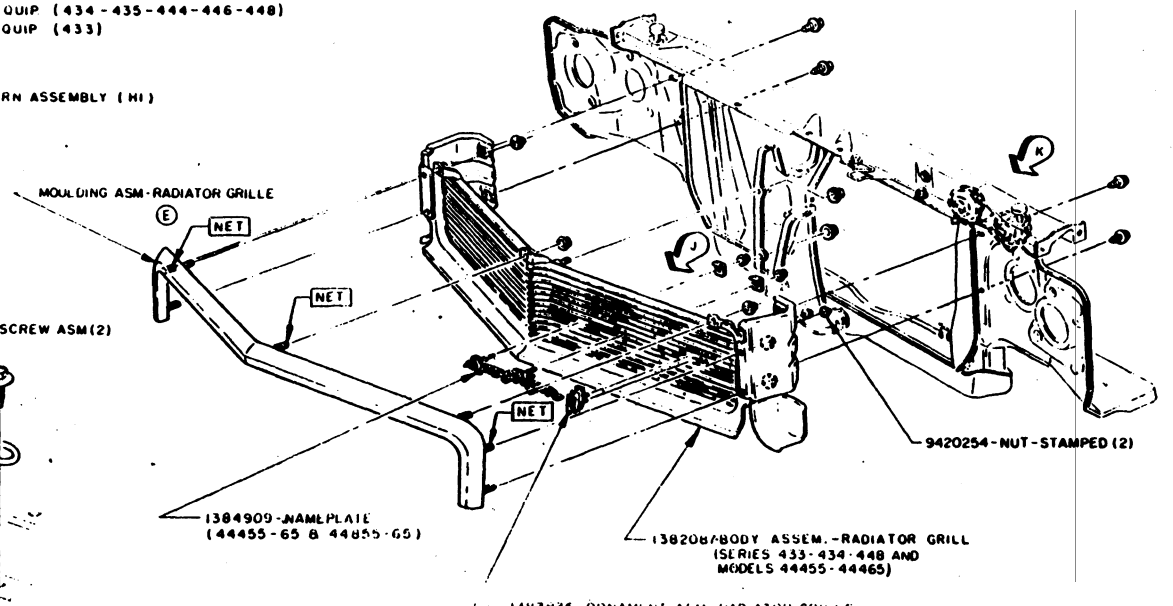

WHERE MINIMUM TORQUE ONLY IS SPECIFIED FAILURE TORQUE IS AT LEAST 1/3 HIGHER

DO NOT SCALE — REPORT ERRORS
TOLERANCES UNLESS OTHERWISE SPECIFIED
± ALLOWED ON TWO PLACE DECIMALS
± .010 ALLOWED ON THREE PLACE DECIMALS
COMMERCIAL TOLERANCES APPLY TO STANDARD PARTS - ROLLED SECTIONS - SHEET METAL GAGES - DRILLED AND PUNCHED HOLES
BURR ALL DRILLED HOLES COUNTERSINK ALL TAPPED HOLES .030 x 82°

DWG DATE 10-13-60	SCALE -H-	DR BORROMEY	
FIRST USED 1968 - A		CK	
REFERENCE		APPR	
MATERIAL SPEC		APPR	
		APPR	

NAME RADIATOR GRILLE & FRONT END INSTALLATION
PART NO. 1383382
SHEET 2 OF 3 SHEETS
PAGE NO 11-42

1383382

V3 P5 S7

DAVE GRAHAM INC. - 2015
ALL RIGHTS RESERVED

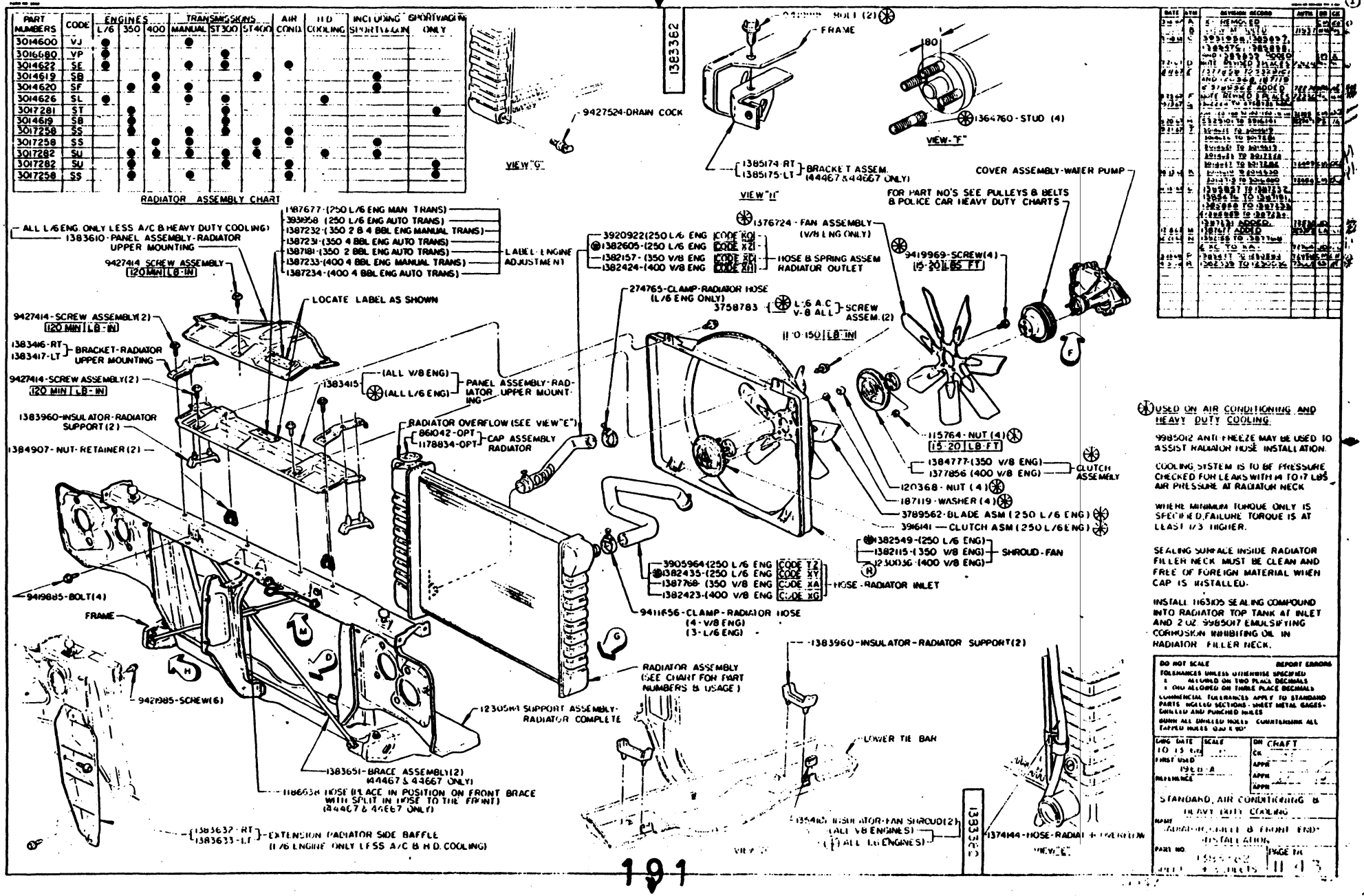

DAVE GRAHAM INC. - 2015
ALL RIGHTS RESERVED

GENERAL INFORMATION

BATTERY

Batteries will leave the Delco plants with a minimum specific gravity of 1.255. Batteries should reach the Buick and G.M.A.D. Assembly Plants with a specific gravity of not less than 1.240.

Stock must be rotated using the earliest manufactured batteries first so as to minimize loss of charge.

Every effort should be exercised to conserve the battery power during assembly. All electrical units should be "ON" only for the period of checking. All lights should be out, switches "OFF" etc. during lunch periods, shift breaks, weekends or holidays.

Battery specific gravity must be at a minimum of 1.230 for winter months (November through March) and not less than 1.220 for the summer months (all year at California, Texas, and Georgia Plants) at time car leaves the plant (point of shipping). This check is mandatory. Specific gravity must be checked with a quality hydrometer and all readings corrected to 80°F. All specific gravity readings mentioned above are after correcting for temperature.

HEADLAMP AIM

Headlamps are to be aimed in accordance with aiming charg Page 12-3.1.

In the event any repair job is done which would affect the headlamp aiming, the lamps are to be re-aimed using either the electronic or mechanical method.

DAVE GRAHAM INC. - 2015
ALL RIGHTS RESERVED

1968 BUICK ASSEMBLY INSTRUCTION MANUAL

SPECIAL - SKYLARK 43000 - 44000 SERIES

ELECTRICAL - SPEEDO CABLES & RADIO (SECTION 12)

	PAGES
General Information Battery - Headlamp Aim.	12-0.1
Delcotron Code Identification	12-1.2
Battery Cable Code Identification	12-1.3
Instrument Cluster Identification	12-1.4
Wire Harness Identification & Usage Chart	12-1.5
Lamp & Fuse Chart	12-2.1
Head Lamp Aim - Chart	12-3.1
Speedometer Cable Routing Installation & Identification Code (3 pages)	12-4.1 thru 12-4.3
Chart - Speedo Gears (2 pages) Canadian Usage	12-5.1 12-5.2
Wire Harness Installation Instrument Panel (3 pages)	12-6.1 thru 12-6.3
Steering Column Wiring	12-6.4
Fuse Block Wiring	12-6.5
Forward Lamp Wiring Harness	12-6.6
Engine Wiring Harness Installation V-8	12-6.7
L-6	12-6.8
Battery Cable Installation (Less 46 Series)	12-6.9
(For 46 Series)	12-6.10
Rear Bumper, Fuel Tank & Luggage Compartment Lamp Wiring	12-6.11
License Lamp, Back-Up Lamp & Fuel Gage Wire - Wagons	12-6.12
Wiring Information - Air Conditioning	12-7.1
Wiring Information (Power Top)	12-9.1
Radio System Installation Radio Knobs & Speaker	12-10.1
Antenna & Capacitors	12-10.2
Power Tail Gate Window Wiring Information	12-11.1

Revised 8-1-67

PART NUMBER- 1383770

PAGE NUMBER- 12-1.0

DAVE GRAHAM INC. - 2015
ALL RIGHTS RESERVED

	PAGES
Stereo Tape Player Installation ---	12-12.1
Rear Window Defogger ---------- Wiring Information	12-13.1
*Fuse Block Wiring ---------- (6 sheets)	12-14.1 thru 12-14.6

*Added 11-9-67

PART NUMBER- 1383770

PAGE NUMBER- 12-1.1

ng

DAVE GRAHAM INC. - 2015
ALL RIGHTS RESERVED

DELCOTRON CODE IDENTIFICATION

The code is stamped on top of drive end frame as installed on engine.

PART NO.	CODE	OUTPUT (AMP.)	END FRAME POSITION	PULLEYS DIA.	PULLEYS GROOVES	USAGE
*1100761	VA	37	Upright	2.50	1	Standard
1100774	BD	55	Upright	2.50	2	A/C with V8 Engine L-6 Engine with K-77 Option
1100802	BF	55	Upright	2.50 (3 Groove Spacing)	2	L-6 Engine with A/C
*1100762	BV	37	Upright	2.50	2	L-6 Engine with Power Steering only

*2-21-68

PART NUMBER- 1383770
PAGE NUMBER- 12-1.2

DAVE GRAHAM INC. - 2015
ALL RIGHTS RESERVED

BATTERY CABLE CODE IDENTIFICATION

PART NO.	CODE	CABLE USAGE	MODEL
*6289176	JD	Cable Asm.-Bat. Neg.	434-436-442-444 V-8 - 350
6290277		Cable Asm.-Bat. Pos.	466 (Gran Sport)
2983780	JE	Cable Asm.-Bat. Neg	434-436-442-444 (V-8)-350
2983720	RP	Cable Asm.-Bat. Neg	433-435-443 (L6)
6289127	JB	Cable Asm.-Bat. Neg	446 (Gran Sport)
*6289175	RZ	Cable Asm.-Positive	433-435-443 (L6)

*2-21-68

PART NUMBER- 1383770
PAGE NUMBER- 12-1.3

DAVE GRAHAM INC. - 2015
ALL RIGHTS RESERVED

INSTRUMENT CLUSTER IDENTIFICATION CODE & USAGE

PART NO.	BODY STYLE	CODE	KILOS	BUZZER	POLICE OPT.	TRANS.
6459827	A	AC				*C.S.
6459828	A	AB	YES	YES		C.S.
6459829	A	AJ			YES	C.S.
6459830	A	AA				2 Spd. Auto
6459831	A	AD		YES		2 Spd. Auto
6459832	A	AE	YES	YES		2 Spd. Auto
6459833	A	AF			YES	2 Spd. Auto
6459834	A	AH				3 Spd. Auto
6459835	A	AG		YES		3 Spd. Auto
6459836	A	AK	YES	YES		3 Spd. Auto
6459867	A	AL		YES		C.S.

*C.S. indicates use with either manual trans. column shift or auto trans. console shift.

8-4-67
PART NUMBER- 1383770
PAGE NUMBER- 12-14

DAVE GRAHAM INC. ©2015
ALL RIGHTS RESERVED

WIRE HARNESS CODE IDENTIFICATION

All wire harnesses are identified by code tape bearing letters and the last four digits of the part number.

PART NAME	CODE	PART NAME	SERIES	USAGE
6297001	SJ	Engine Wiring	A Jobs	L-6 Engine
6295440	SG	Engine Wiring	A Jobs	V-8 Engine - 350 Cu. In.
6295441	SH	Engine Wiring	G.S. Jobs	400 Cu. In. Engine
6295442	SL	Forward Lamp	A Jobs	All
6295437	SA	Inst. Panel	A Jobs	Standard
6295438	SD	Inst. Panel	G.S. Jobs	Long Console D55
*6295448	None	Console	All	With D55 & M33
*6295443	None	Rear Bumper Lamp	All - Less Wagons	

For wiring circuit diagram drawing numbers see specification list

*2-21-68

PART NUMBER- 1383770
PAGE NUMBER- 12-1.5

DAVE GRAHAM INC. - 2015
ALL RIGHTS RESERVED

WIRE HARNESS CODE IDENTIFICATION

All wire harnesses are identified by code tape bearing letters and the last four digits of the part number.

PART NAME	CODE	PART NAME	SERIES	USAGE
6295439	SF	Engine Wiring	A Jobs	L-6 Engine
6295440	SG	Engine Wiring	A Jobs	V-8 Engine - 350 Cu. In.
6295441	SH	Engine Wiring	G.S. Jobs	400 Cu. In. Engine
6295442	SL	Forward Lamp	A Jobs	All
6295437	SA	Inst. Panel	A Jobs	Standard
6295438	SD	Inst. Panel	G.S. Jobs	Long Console D55
6295448	SU	Console	All	With D55 & M33
6295443		Rear Bumper Lamp	All - Less Wagons	

*1-18-67
PART NUMBER- 1383770
PAGE NUMBER- 12-1.6

DAVE GRAHAM INC. - 2015
ALL RIGHTS RESERVED

LAMPS

PART NUMBER	WHERE USED	LAMP NO.	NO. USED	CANDLE POWER	MODEL
	FRONT				
5954001	HEADLAMP - 5-3/4 DIA. TYPE 1	4001	2	37.5W	ALL
5954002	HEADLAMP - 5-3/4 DIA. TYPE 2	4002-L	2	37.5-55W	ALL
5948928	HEADLAMP - 5-3/4 DIA. TYPE 2 (EXPORT)	4003	2	37.5-55W	ALL
9423295	PARK & DIR. SIGNAL LAMP	1157 NA	2	32/4	ALL
274331	SPOTLAMP	4404	1	30W	ALL
9421835	SIDE MARKER LAMP (OPT. WITH 9427952)	193-A	2	2	ALL
9427952	SIDE MARKER LAMP (OPT. WITH 9421835)	194-A	2	2	ALL
	REAR				
9417867	TAIL, STOP & DIR. SIGNAL LAMP	1157	4	32/4	ALL EXCEPT WAGON
9417867	BACK-UP LAMP	1157	2	32/4	ALL EXCEPT WAGON
9417867	TAIL, STOP & DIR. SIGNAL LAMP	1157	2	32/4	WAGONS ONLY
9417866	BACK-UP LAMP	1156	2	32	WAGONS ONLY
9421777	LICENSE LAMP	97	1	4	ALL
9427587	SIDE MARKER LAMP (OPT. WITH 9421330)	193	2	2	ALL
9421330	SIDE MARKER LAMP (OPT. WITH 9427587)	194	2	2	ALL
	INSTRUMENT PANEL				
9421330	INDIRECT LAMP	194	2	2	ALL
9425542	INDIRECT LAMP	168	1	3	ALL
	INDICATORS				
9417561	HEADLAMP HI BEAM	161	1	1	ALL
9417561	DIR. SIGNAL	161	2	1	ALL
9421330	OIL PRESSURE	194	1	2	ALL
9421330	WATER TEMPERATURE	194	1	2	ALL
9421330	GENERATOR CHARGE	194	1	2	ALL
9427984	CRUISE CONTROL	161	1	3	64-66-68
	SERVICE ILLUMINATION				
9414724	RADIO DIAL	1893	1	2	ALL
9414927	HEATER - DEFROSTER CONTROL DIAL	1893	2	2	ALL
274004	ASH RECEIVER	1445	1	5	ALL
9421330	BRAKE WARNING	194	1	2	ALL
9414927	GLOVE COMPARTMENT LAMP	1893	1	2	ALL
1312812	AUTO TRANSMISSION DIAL CONSOLE	53	2	1	ALL
1312812	TACHOMETER	53	1	1	66
142452	LUGGAGE COMPARTMENT	89	1	6	ALL
344136	TROUBLE LAMP	1004	1	15	ALL
	INTERIOR ILLUMINATION				
9414045	DOME - ROOF CENTER	211	1	15	ALL (△)
9421117	COURTESY - RT & LT SAIL PANELS	212-1	2	6	SKYLARK COUPES ONLY
142452	COURTESY LIGHT INST. PANEL	89	2	6	ALL
142453	COURTESY LIGHT INTERIOR	90	1	6	WAGONS ONLY
9427984	COURTESY LIGHT (CONSOLE)	161	1	3	63-66-66
3836436	FLASHER DIR. SIGNAL (OPT WITH 3836438)		1		ALL EXCEPT WAGON
3836432	FLASHER DIR. SIGNAL (OPT WITH 3836436)		1		ALL EXCEPT WAGON
3836438	FLASHER DIR. SIGNAL (OPT WITH 3836398)		1		WAGONS ONLY
3836439	FLASHER DIR. SIGNAL (OPT WITH 3836388)		1		WAGONS ONLY
3883796	FLASHER HAZARD (OPT WITH 1381389)		1		ALL
1381389	FLASHER HAZARD (OPT WITH 3883796)		1		ALL

1384327

FUSES

GM PART NUMBER	COLOR CODE	WHERE USED	AMP	LENGTH
10665	PLAIN	CLOCK, LIGHTER, COURTESY, GLOVE BOX, DOME & TRUNK LIGHT & BUZZER	20	1-1/4
10665	PLAIN	TAIL, CUMMERKING, LICENSE, PANEL ILL., SIDE MARKER & PARK LAMPS	30	1-1/4
10665	PLAIN	STOP AND HAZARD LAMPS	20	1-1/4
147682	PLAIN	INSTRUMENT LAMPS	4	5/8
455844 / 9426332	PLAIN / WHITE	WIPER	25	1-1/4
455844 / 9426332	PLAIN / WHITE	HEATER & A/C BLOWER & COMPRESSOR CLUTCH	25	1-1/4
117142 / 9426334	PLAIN / RED	RADIO ANTENNA, PWR. WINDOW RELAY & TRANS. SOLENOID	10	1-1/4
10665	PLAIN	DIRECTIONAL SIGNAL & BACK-UP, CRUISE, REAR DEFOGGER	20	1-1/4
117142 / 9426334	PLAIN / RED	GAGES	10	1-1/4
147682	PLAIN	TACHOMET.R (IN-LINE FUSE)	4	5/8
147682	PLAIN	CARBURETOR SOLENOID - (IN-LINE FUSE) (L-6 ENGINE WITH AUTO. TRANS. ONLY)	4	5/8

FUSIBLE LINK REPAIR PARTS

GM PART NUMBER	WIRE COLOR	WHERE USED	GAGE	LENGTH
6292178	BLACK	HEADLIGHT FEED CIRCUIT	16	7.0
821260	——	FUSIBLE LINK REPAIR SPLICE CLIP	——	——
6292179	BROWN	IGNITION & ACCESSORY FEED CIRCUIT	14	7.0

1384327

200

DOCUMENTATION REQUIRED

WORDS MARKED THUS [ ] INDICATES ABBREVIATED IDENTIFICATION OF FUSE CAVITY IN FUSE BLOCK.

(△) OMIT ON CONVERTIBLE & SPECIAL TRIM.

DO NOT SCALE — REPORT ERRORS

TOLERANCES UNLESS OTHERWISE SPECIFIED
.X ALLOWED ON TWO PLACE DECIMALS
.XXX ALLOWED ON THREE PLACE DECIMALS
COMMERCIAL TOLERANCES APPLY TO STANDARD PARTS - ROLLED SECTIONS - SHEET METAL GAGES - DRILLED AND PUNCHED HOLES.
BURR ALL DRILLED HOLES. CHAMFER ALL TAPPED HOLES .040 X 60°.

DWG. DATE	SCALE	DR. P.P.
12 14 66		CH.
FIRST USED 1967 "A"		APPR.
REFERENCE		APPR.
MATERIAL SPEC.		APPR.

NAME: CHART LAMP & FUSE

PART NO. 1384327 — PAGE NO. 12-2

V3 P5 7

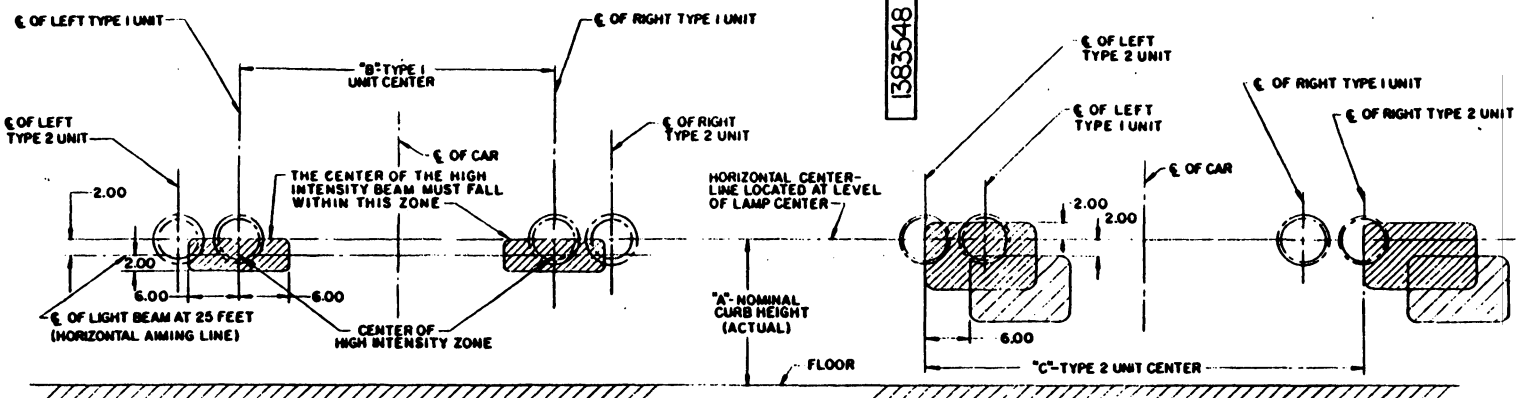

1383548

HIGH BEAM PATTERN OF TYPE 1 UNITS AS VIEWED ON SCREEN FROM INSIDE CAR (TYPE 2 UNITS COVERED)

LOW BEAM PATTERN OF TYPE 2 UNIT AS VIEWED ON SCREEN FROM INSIDE CAR.

VISUAL AIMING SPECIFICATIONS

1. DISTANCE FROM FRONT FACE OF TYPE 2 UNITS TO SCREEN IS 25 FEET
2. FLOOR ON WHICH CAR IS TESTED MUST BE PERFECTLY LEVEL, TIRES MUST BE PROPERLY INFLATED, DOORS MUST BE CLOSED & CAR ROCKED SIDEWAYS PRIOR TO AIMING.
3. MEASURE DIMENSION "A" FOR LAMP AIM RECHECKS ON SCREEN.
4. UNITS AIMED ELECTRICALLY SHALL BE AIMED WITH 12.8 ±.5 VOLTS AT HEADLAMP TERMINALS.
5. ALL UNITS MUST MEET THE FOLLOWING AIMING TOLERANCES.

AIM INSPECTION LIMITS

TYPE 1 UNITS - HIGH BEAM

VERTICAL AIM - THE CENTER OF THE HIGH INTENSITY ZONE TO BE ±2.00 INCHES FROM A LINE 2.00 INCHES BELOW THE HORIZONTAL CENTERLINE OF THE LAMP.

HORIZONTAL AIM - THE CENTER OF THE HIGH INTENSITY ZONE TO BE ± 6.00 INCHES FROM THE VERTICAL CENTERLINE OF THE LAMP.

TYPE 2 UNITS - LOW BEAM

VERTICAL AIM - THE TOP EDGE OF THE HIGH INTENSITY ZONE TO BE LOCATED FROM 2.00 INCHES ABOVE THE HORIZONTAL CENTERLINE OF THE LAMP TO 2.00 INCHES BELOW THE HORIZONTAL CENTERLINE OF THE LAMP.

HORIZONTAL AIM - THE LEFT EDGE OF THE HIGH INTENSITY ZONE TO BE LOCATED FROM THE VERTICAL CENTERLINE OF THE LAMP TO 6.00 INCHES TO THE RIGHT OF THE VERTICAL CENTERLINE OF THE LAMP.

CAUTION - DO NOT AIM TYPE 2 UNITS ON THE UPPER BEAM.

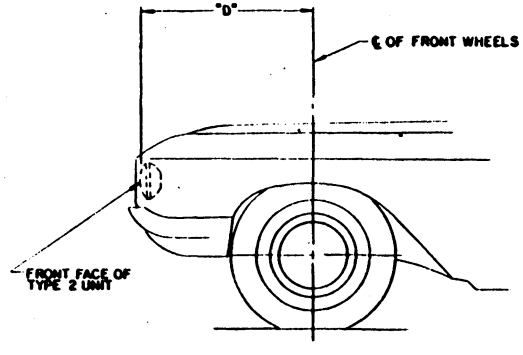

MECHANICAL AIMING SPECIFICATIONS

1. VEHICLE MUST MEET SAME SPECIFICATIONS AS VISUAL AIMING, EXCEPT ITEMS 3 & 4
2. MECHANICAL AIMER MUST CONFORM TO SAE RECOMMENDED PRACTICE, HEADLAMP AIMING DEVICE FOR MECHANICALLY AIMABLE SEALED BEAM HEADLAMP UNITS - SAE J602

AIM INSPECTION LIMITS

TYPE 1 UNITS - HIGH BEAM

VERTICAL AIM - SET MECHANICAL AIM GRADUATION AT 2.00 INCHES DOWN. UNIT TO CHECK BETWEEN .50 INCH DOWN AND 3.50 INCHES DOWN FOR PROPER AIM.

HORIZONTAL AIM - SET MECHANICAL AIM GRADUATION AT 0 INCHES. UNIT TO CHECK BETWEEN 4.00 INCHES TO THE LEFT AND 4.00 INCHES TO THE RIGHT FOR PROPER AIM.

TYPE 2 UNITS - LOW BEAM

VERTICAL AIM - SET MECHANICAL AIM GRADUATION AT 2.00 INCHES DOWN. UNIT TO CHECK BETWEEN .50 INCH DOWN AND 3.50 INCHES DOWN FOR PROPER AIM.

HORIZONTAL AIM - SET MECHANICAL AIM GRADUATION AT .50 INCH TO THE RIGHT OF 0 INCH LINE. UNIT TO CHECK BETWEEN 0 INCH LINE AND 4.00 INCHES TO THE RIGHT FOR PROPER AIM.

(8) NOTE: IT IS PERMISSIBLE TO CHECK "2" UNITS TO A MECHANICAL AIMER WHICH HAS BEEN MASTERED TO CHECK A "1" UNIT.

SERIES		DIMENSIONS "A"	"B"	"C"	"D"
A	ALL LESS WAGONS	27.37			
	REG. WAGON	28.23	51.46	64.22	30.10
	SPORTWAGON	28.29			
B	LESABRE	27.09			
	WILDCAT	26.14	47.18	62.36	29.32
C	ELECTRA	26.32			
E	RIVIERA	25.00	24.92	37.84	34.76

1383548

THIS CHART FOR RIGHT HAND RULE OF THE ROAD DRIVING. FOR LEFT HAND RULE OF THE ROAD DRIVING THE LOW BEAM PATTERN IS SYMMETRICALLY OPPOSITE FROM THE PATTERN AS SHOWN. THE HIGH BEAM PATTERN REMAINS AS IS.

ALL DIMENSIONS ARE DESIGN DIMENSIONS EXCEPT AS NOTED AND DO NOT INCLUDE TOLERANCES

DO NOT SCALE — REPORT ERRORS
TOLERANCES UNLESS OTHERWISE SPECIFIED
FRACTIONS ±1/64
DECIMALS ONE PLACE ±.1
DECIMALS TWO PLACE ±.01
DECIMALS THREE PLACE ±.005
COMMERCIAL TOLERANCES APPLY TO STANDARD PARTS, ROLLED SECTIONS, SHEET METAL GAGES, DRILLED AND PUNCHED HOLES
BURR ALL DRILLED HOLES, COUNTERSINK ALL TAPPED HOLES 100 X 90°

DWG DATE 10-20-66 | SCALE —
FIRST USED 1968 ALL
REFERENCE
MATERIAL SPEC
DR KRIEGER
CK G. MATENSON
APPR —
APPR —
APPR

NAME CHART - HEADLAMP AIMING
PART NO. 1383548 | PAGE NO. 12-3.1

201

DAVE GRAHAM INC. - 2015
ALL RIGHTS RESERVED

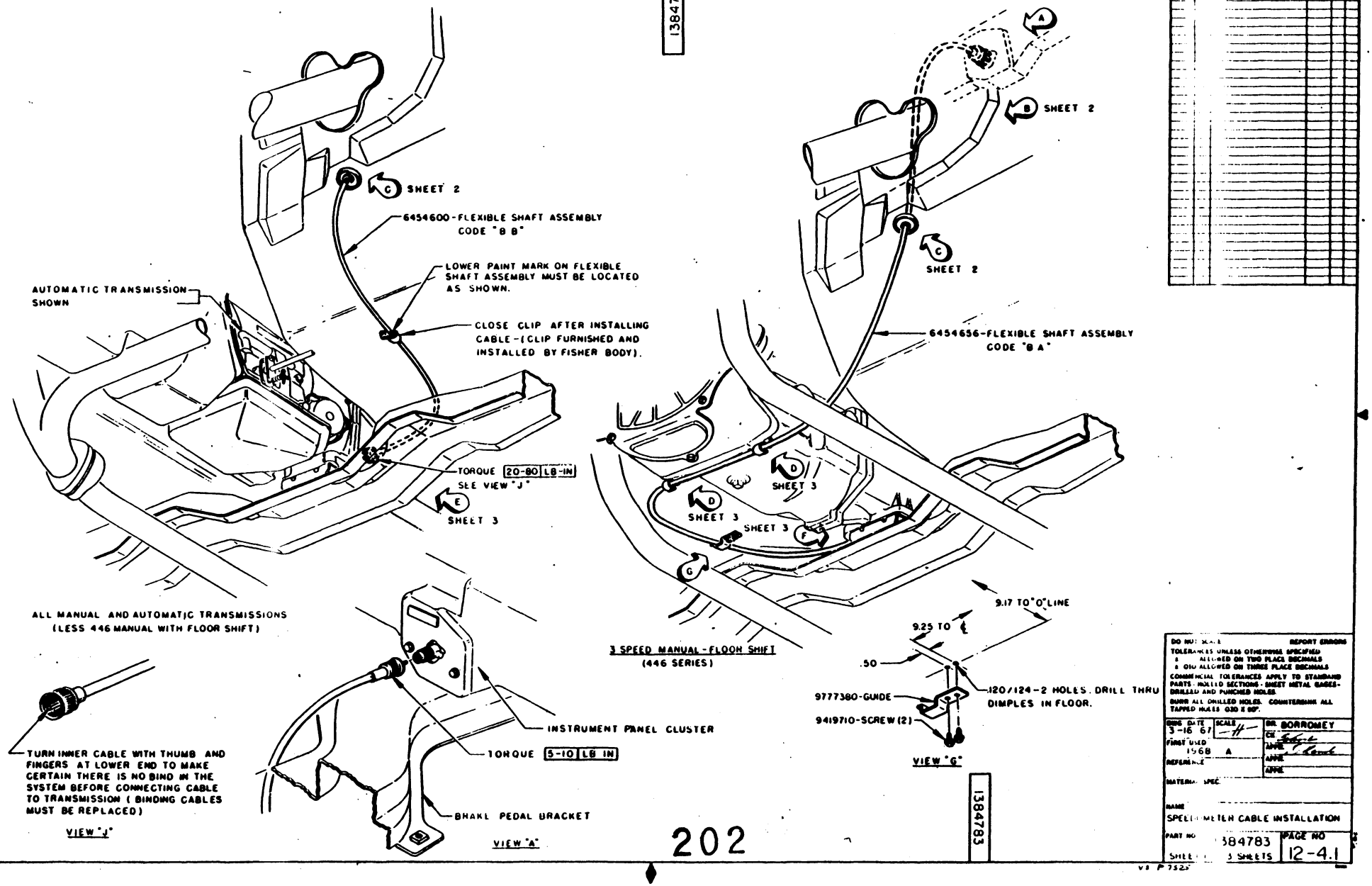

DAVE GRAHAM INC. - 2015
ALL RIGHTS RESERVED

1384763

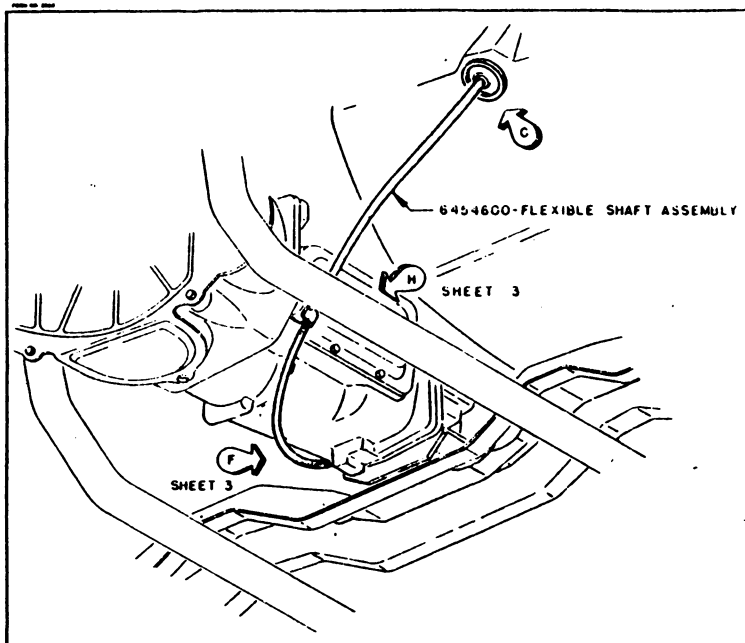

4 SPEED MANUAL TRANSMISSION
WITH FLOOR SHIFT (446 SERIES)
ROUTE AS SHOWN WHEN USING
RIGHT ANGLE ADAPTORS 396338
AND 395430 (SEE VIEW "F" SHEET 3)

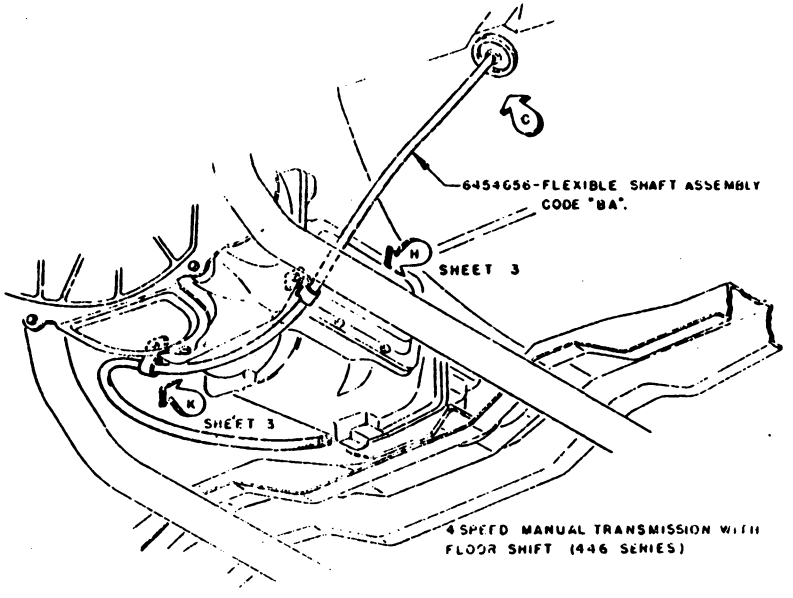

4 SPEED MANUAL TRANSMISSION WITH
FLOOR SHIFT (446 SERIES)

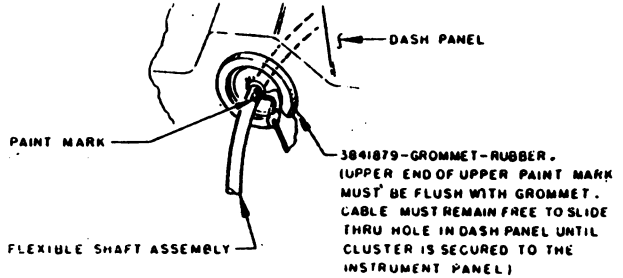

3841879-GROMMET-RUBBER.
(UPPER END OF UPPER PAINT MARK
MUST BE FLUSH WITH GROMMET.
CABLE MUST REMAIN FREE TO SLIDE
THRU HOLE IN DASH PANEL UNTIL
CLUSTER IS SECURED TO THE
INSTRUMENT PANEL)
USE SEALER AS REQUIRED.

VIEW "C"

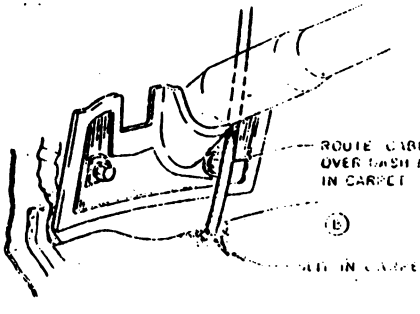

ROUTE CABLE TO RIGHT OF STEERING COLUMN
OVER DASH MAT AND COVER AND THRU SLIT
IN CARPET AS SHOWN.

VIEW "B"

203

DAVE GRAHAM INC. - 2015
ALL RIGHTS RESERVED

DAVE GRAHAM INC. - 2015
ALL RIGHTS RESERVED

1384783

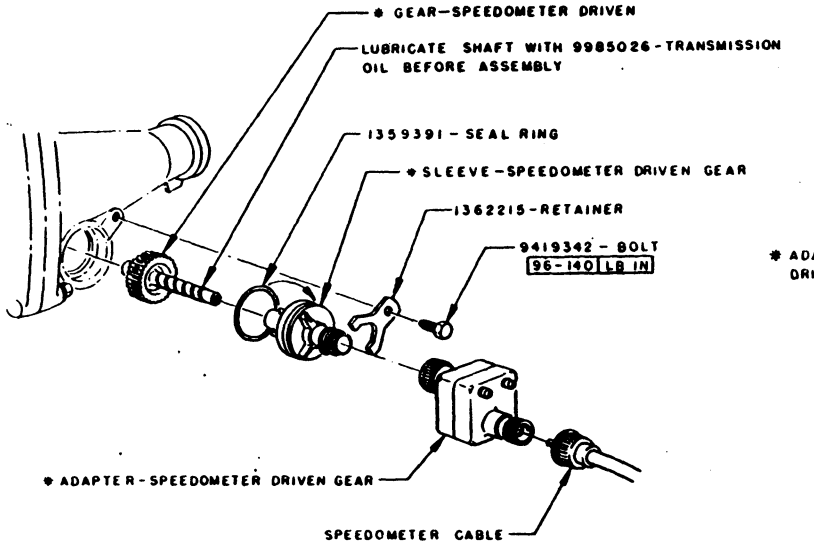

AUTOMATIC TRANSMISSION
VIEW "E"

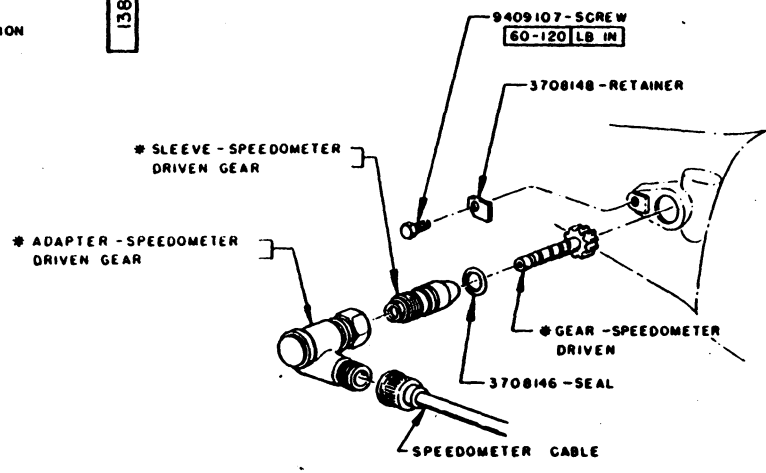

MANUAL TRANSMISSION
VIEW "F"

DATE	SYM	REVISION RECORD	APPR	DR	CK
	A	3 REMOVED			

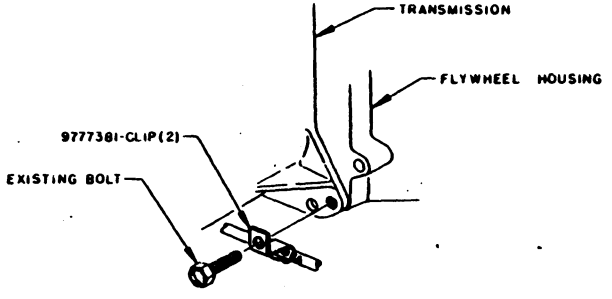

3 SPEED MANUAL TRANSMISSION
VIEW "D" (TYPICAL BOTH SIDES)

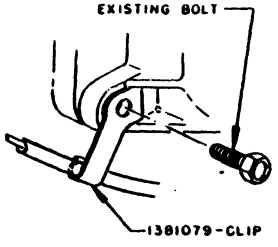

VIEW "H"

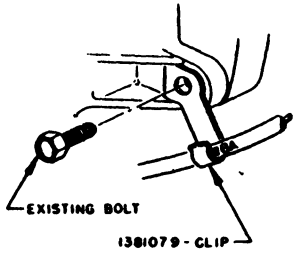

VIEW "K"

4 SPEED MANUAL TRANSMISSION

FOR PARTS MARKED "*", SEE CHART-SPEEDOMETER AND REAR AXLE GEARS.

DO NOT SCALE — REPORT ERRORS
TOLERANCES UNLESS OTHERWISE SPECIFIED
± ALLOWED ON TWO PLACE DECIMALS
± AND ALLOWED ON THREE PLACE DECIMALS
COMMERCIAL TOLERANCES APPLY TO STANDARD PARTS - ROLLED SECTIONS - SHEET METAL GAGES - DRILLED AND PUNCHED HOLES.
REAM ALL DRILLED HOLES COUNTERSINK ALL TAPPED HOLES 100 X 90°.

ENG. DATE 3-16-67	SCALE H	DR BORROMEY	
FIRST USED 1968 A		CK	
REFERENCE		APPR	
		APPR	
MATERIAL SPEC		APPR	

NAME
SPEEDOMETER CABLE INSTALLATION
PART NO 1384783 | PAGE NO 12-4.3
SHEET 3 OF 3 SHEETS

1384783

AXLE RATIO	TRANSMISSION ASM TYPE	TRANSMISSION ASM MODEL CODE	TIRE SIZE	SPEEDO DRIVEN GEAR PART NO.	SPEEDO DRIVEN GEAR NO. OF TEETH	SPEEDO DRIVEN GEAR IDENT. COLOR	SLEEVE ASM	ADAPTER PART NO.	ADAPTER RATIO	ADAPTER COLOR
2.56	2-SPEED AUTO	ME	F.70 x 14 7.75 x 14 205R x 14 7.75 x 15 8.25 x 14	1359270 9780628	36 35	WHITE PINK	1362284			
2.73	2-SPEED AUTO	LC	205R x 14 F.70 x 14 7.75 x 14 7.75 x 15 8.25 x 14	1359270 9780628	36 35	WHITE PINK	1362284			
		ME	F.70 x 14 7.75 x 14 205R x 14 7.75 x 15 8.25 x 14	1359273 1359272 1359271	39 38 37	BROWN BLUE RED				
2.93	2-SPEED AUTO	LC LC, MH LE MH	F.70 x 14 7.75 x 14 205R x 14 8.25 x 14 7.75 x 15 8.55 x 14	1359273 1359272 1359271	39 38 37	BROWN BLUE RED	1362284			
		ME	F.70 x 14 7.75 x 14 205R x 14 7.75 x 15 8.25 x 14	1362195 1362048	41 40	YELLOW BLACK	1362285			
	3-SPEED AUTO	BA BA, BW BW	F.70 x 14 7.75 x 14 205R x 14 8.25 x 14 8.55 x 14	1359273 1359272 1359271	39 38 37	BROWN BLUE RED	1362294			
	3-SPEED MANUAL	BJ	F.70 x 14 7.75 x 14 205R x 14 7.75 x 15 8.25 x 14 8.55 x 14	3868341	18	BROWN	3775689			
3.23	2-SPEED AUTO	LC LC, MH MH	F.70 x 14 7.75 x 14 205R x 14 8.25 x 14 7.75 x 15 8.55 x 14	1362196 1362049 1362195	44 42 41	PURPLE GREEN YELLOW	1362285			
		ME	F.70 x 14 7.75 x 14 205R x 14 8.25 x 14 7.75 x 15	1372313 9780470	45 44	LT. BLUE DK. GRAY				
	3-SPEED AUTO	BW	205R x 14 8.25 x 14 8.55 x 14	1362049 1362195	42 41	GREEN YELLOW	1362293			
	3 & 4 SPEED MANUAL	BB, HE QP, BJ	F.70 x 14 7.75 x 14 205R x 14 8.25 x 14 7.75 x 15	3868343	20	BLUE	3775689			
		BJ	8.55 x 14	3869342	19	NATURAL				

1385210

AXLE RATIO	TRANSMISSION ASM TYPE	TRANSMISSION ASM MODEL CODE	TIRE SIZE	SPEEDO DRIVEN GEAR PART NO.	SPEEDO DRIVEN GEAR NO. OF TEETH	SPEEDO DRIVEN GEAR IDENT. COLOR	SLEEVE ASM	ADAPTER PART NO.	ADAPTER RATIO	ADAPTER COLOR
3.42	2-SPEED AUTO	LC	F.70 x 14 7.75 x 14 205R x 14	1372313	45	LT. BLUE	1362285			
		LC, MH LE MH	8.25 x 14 7.75 x 15 8.55 x 14	9780470 1362196	44 43	DK. GRAY PURPLE				
	3-SPEED AUTO	BA	F.70 x 14 7.75 x 14	1372313	45	LT. BLUE				
		BW, BA BW BA BW	205R x 14 8.25 x 14 7.75 x 15 8.55 x 14	9780470 1362196	44 43	DK. GRAY PURPLE	1362293			
	3-SPEED MANUAL	BB, BJ	F.70 x 14 205R x 14 7.75 x 15 7.75 x 14 8.25 x 14	3868344	21	RED	3775689			
	4-SPEED MANUAL	HE	205R x 14 7.75 x 15 F.70 x 14							
3.64	2-SPEED AUTO	MH	205R x 14 8.25 x 14 8.55 x 14	1359272 1359271	38 37	BLUE RED	1362284	1367643	.8045	LT. GREEN
	3-SPEED AUTO	BA, BW	F.70 x 14 205R x 14 7.75 x 14 7.75 x 15 8.55 x 14	1359273 1359272 1359271	39 38 37	BROWN BLUE RED	1362294			
	3-SPEED MANUAL	BB	F.70 x 14 205R x 14 7.75 x 15	3868341	18	BROWN	3775689			
	4-SPEED MANUAL	HE	F.70 x 14 205R x 14 7.75 x 15 7.75 x 14	3670851	17	PURPLE		386338	.788	YELLOW
3.42	2-SPEED AUTO.	ME	205R x 14 F.70 x 14	1359272 1359273	38 39	BLUE BROWN	1362284	1367643	.8045	LT. GRN.

DATE	BY	REVISION RECORD	APPR.	DR.	CK.
3-26-67	A	Revised	17282	PP	AT
7-28-67	B	1.D. 2.94 to 1362284		PP	

TRANSMISSION TYPE	TRANSMISSION MODEL CODE	SPEEDO DRIVING WORM (REF.) PART NO.	NO. OF TEETH
3-SPD. MAN.	BJ, QP	3915083	8
	BB	9777230	8
4-SPD. MAN.	HE	3915083	8
2-SPD. AUTO.	ME	1374094	18
	LC, MH	1371878	17
3-SPD. AUTO.	BA, BW	8423312	17

DO NOT SCALE — REPORT ERRORS
TOLERANCES UNLESS OTHERWISE SPECIFIED
x ALLOWED ON TWO PLACE DECIMALS
x .010 ALLOWED ON THREE PLACE DECIMALS
COMMERCIAL TOLERANCES APPLY TO STANDARD PARTS - ROLLED SECTIONS - SHEET METAL GAGES - DRILLED AND PUNCHED HOLES
BREAK ALL DRILLED HOLES. COUNTERSINK ALL TAPPED HOLES .030 x 80°

DWG. DATE	4-10-67
SCALE	1
FIRST USED	1968 "A"
REFERENCE	
MATERIAL SPEC	
DR.	P. PLAMONDON
CK.	
APPR.	
APPR.	
APPR.	
NAME	CHART - SPEEDOMETER GEARS
PART NO.	1385210
SHEET 1 OF 2 SHEETS	
PAGE NO.	12-5.1

1385210

205

V3 P5 E45

FLINT, MICH. U.S.A.

DAVE GRAHAM INC. - 2015
ALL RIGHTS RESERVED

DAVE GRAHAM INC. - 2015
ALL RIGHTS RESERVED

1385210

AXLE RATIO	TRANSMISSION ASM TYPE	TRANSMISSION ASM MODEL CODE	TIRE SIZE	SPEEDO DRIVEN GEAR PART NO.	SPEEDO DRIVEN GEAR NO. OF TEETH	SPEEDO DRIVEN GEAR IDENT. COLOR	SLEEVE ASM	ADAPTER PART NO.	ADAPTER RATIO	ADAPTER COLOR
3.91	2-SPEED AUTO	LC	F. 70 x 14				1362285	1367643	.8095	LT. GREEN
			F. 75 x 14	1362049	42	GREEN				
			205R x 14	1362195	41	YELLOW				
		MH	B. 25 x 14							
			B. 55 x 14	1362048	40	BLACK				
			F. 75 x 15	1362195	41	YELLOW				
		ME	F. 70 x 14	1372313	45	LT. BLUE				
			F. 75 x 14							
			205R x 14	9798470	44	BROWN				
			F. 75 x 15							
			B. 25 x 14	1362196	43	PURPLE				
	3-SPEED AUTO	BA	F. 75 x 15				1362293			
			F. 70 x 14							
		BA, BW	F. 75 x 14	1362049	42	GREEN				
			205R x 14							
		BW	B. 25 x 14							
		BA	F. 75 x 15	1362195	41	YELLOW				
		BW	B. 55 x 14	1362048	40	BLACK				
	3-SPEED MANUAL	QP, RJ	F. 70 x 14	3860341	18	BROWN	3775589	1367644	.733	RED
			F. 75 x 14							
			205R x 14							
			B. 25 x 14	3860342	19	NATURAL		1367643	.8095	LT. GREEN
			F. 75 x 15							
		RJ	B. 55 x 14							
		DB	F. 70 x 14	3860341	18	BROWN		1367644	.733	RED
			205R x 14					1367643	.8095	GREEN
			F. 75 x 15	3860342	19	NATURAL				
	4-SPEED MANUAL	ME	F. 70 x 14							
			205R x 14					396338	.785	YELLOW
			F. 75 x 15	3860342	19	NATURAL				

AXLE RATIO	TRANSMISSION ASM TYPE	TRANSMISSION ASM MODEL CODE	TIRE SIZE	SPEEDO DRIVEN GEAR PART NO.	SPEEDO DRIVEN GEAR NO. OF TEETH	SPEEDO DRIVEN GEAR IDENT. COLOR	SLEEVE ASM	ADAPTER PART NO.	ADAPTER RATIO	ADAPTER COLOR
3.07	2-SPEED AUTO	LC, MH	F. 70 x 14	1362195	41	YELLOW	1362285			
			F. 75 x 14							
			205R x 14	1362048	40	BLACK				
			F. 75 x 15							
			B. 25 x 14							
		ME	F. 70 x 14							
			F. 75 x 14	1362196	43	PURPLE				
			205R x 14							
			F. 75 x 15							
			B. 25 x 14	1362049	42	GREEN				
	3-SPEED AUTO	BA	F. 70 x 14	1362195	41	YELLOW	1362293			
		BA, BW	205R x 14	1362048	40	BLACK				
		BA	F. 75 x 15							
			B. 25 x 14							
		BW	B. 55 x 14	1359273	39	BROWN	1362296			
			F. 70 x 14	3860343		BLUE				
	3-SPEED MANUAL	RJ	F. 75 x 14				3775589			
			205R x 14	3860342	19	NATURAL				
			F. 75 x 15							
			B. 25 x 14							
3.38	2-SPEED AUTO	LC	F. 70 x 14	9788420	44	BROWN	1362285	1367643	.8095	LT. GREEN
			F. 75 x 14							
			F. 75 x 15	1362196	43	PURPLE				
			205R x 14							
		LC, MH	B. 25 x 14							
		MH	B. 55 x 14	1362195	41	YELLOW				
			F. 70 x 14	1359272	38	BLUE				
		ME	F. 75 x 14							
			205R x 14							
			B. 25 x 14	1372313	45	LT. BLUE				
			F. 75 x 15							
	3-SPEED AUTO	BW	205R x 14				1362295			
			B. 25 x 14	1367196	43	PURPLE		1362293		
			B. 55 x 14							
				1362049	42	GREEN				
	3-SPEED MANUAL	QP, RJ	F. 70 x 14	3860344	21	RED	3775589			
			F. 75 x 14							
			205R x 14							
			B. 25 x 14	3860343	20	BLUE				
			F. 75 x 15							
		RJ	B. 55 x 14							

CANADIAN USAGE

DATE	SYM	REVISION RECORD	ARTH	DR	CK
11-26-67	A	Revised	72282	PP	AT

TRANSMISSION TYPE	TRANSMISSION MODEL CODE	SPEEDO DRIVING WORM (REF.) PART NO.	SPEEDO DRIVING WORM (REF.) NO. OF TEETH
3-SPD. MAN.	QP, RJ	3815003	8
	DB	9777230	8
4-SPD MAN.	ME	3815003	8
2-SPD. AUTO	LC, MH	1371878	17
	ME	1374094	18
3-SPD. AUTO	BA, BW	8423312	17

DO NOT SCALE — REPORT ERRORS
TOLERANCES UNLESS OTHERWISE SPECIFIED:
.x ALLOWED ON TWO PLACE DECIMALS
.xx OR ALLOWED ON THREE PLACE DECIMALS
COMMERCIAL TOLERANCES APPLY TO STANDARD PARTS - ROLLED SECTIONS - SHEET METAL GAUGES - DRILLED AND PUNCHED HOLES
BURR ALL DRILLED HOLES — COUNTERSINK ALL TAPPED HOLES .030 X 80°.

DWG DATE 4-10-67 — SCALE — DR P. PLAMONDON — CK — APPR. — APPR. — APPR.
FIRST USED 1968 - "A"
REFERENCE
MATERIAL SPEC
NAME CHART - SPEEDOMETER GEARS
PART NO. 1385210 — PAGE NO. 12-5.2
SHEET 2 OF 2 SHEETS

V8 P5 S15

1385210

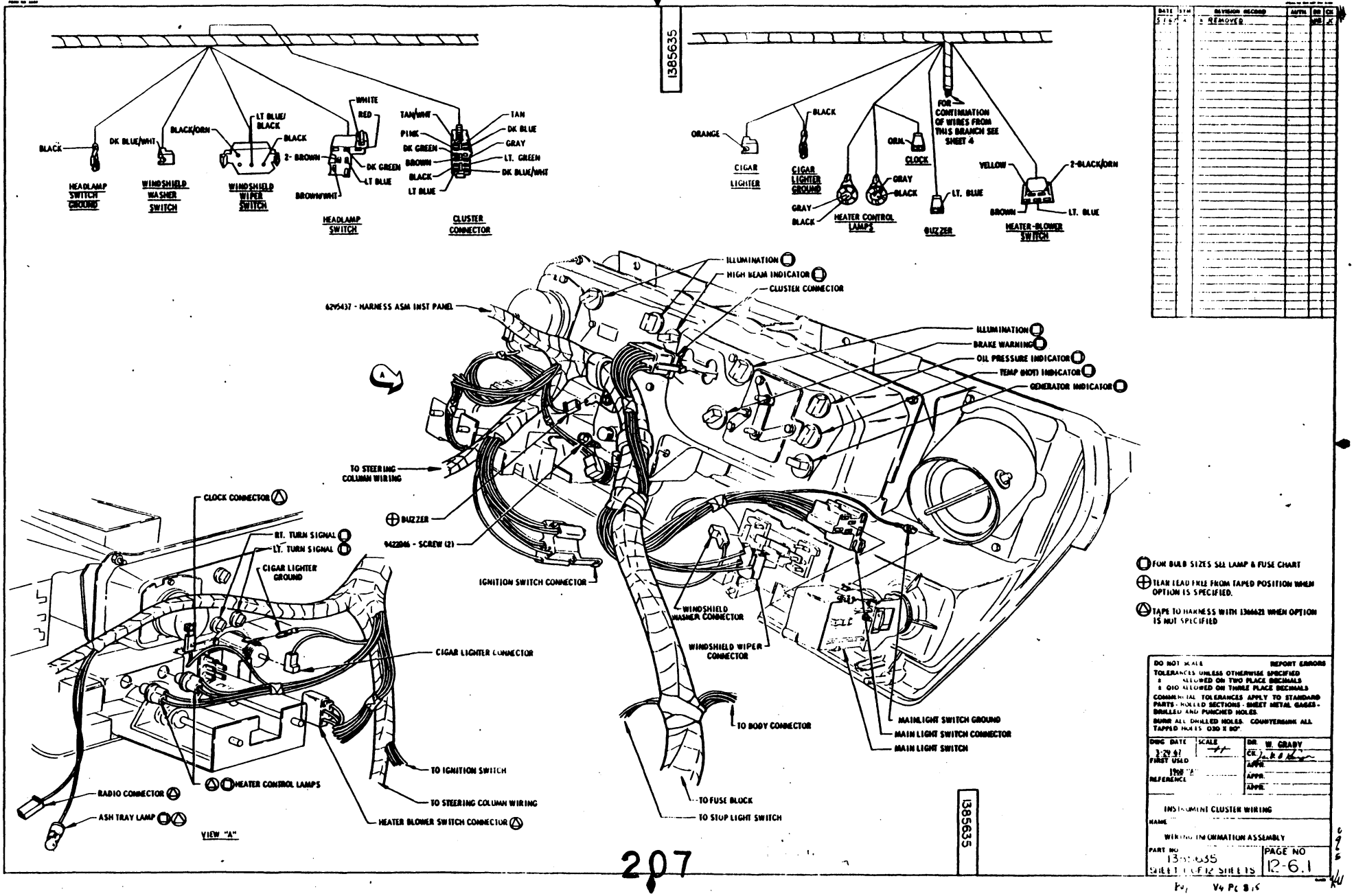

DAVE GRAHAM INC. - 2015
ALL RIGHTS RESERVED

DAVE GRAHAM INC. - 2015
ALL RIGHTS RESERVED

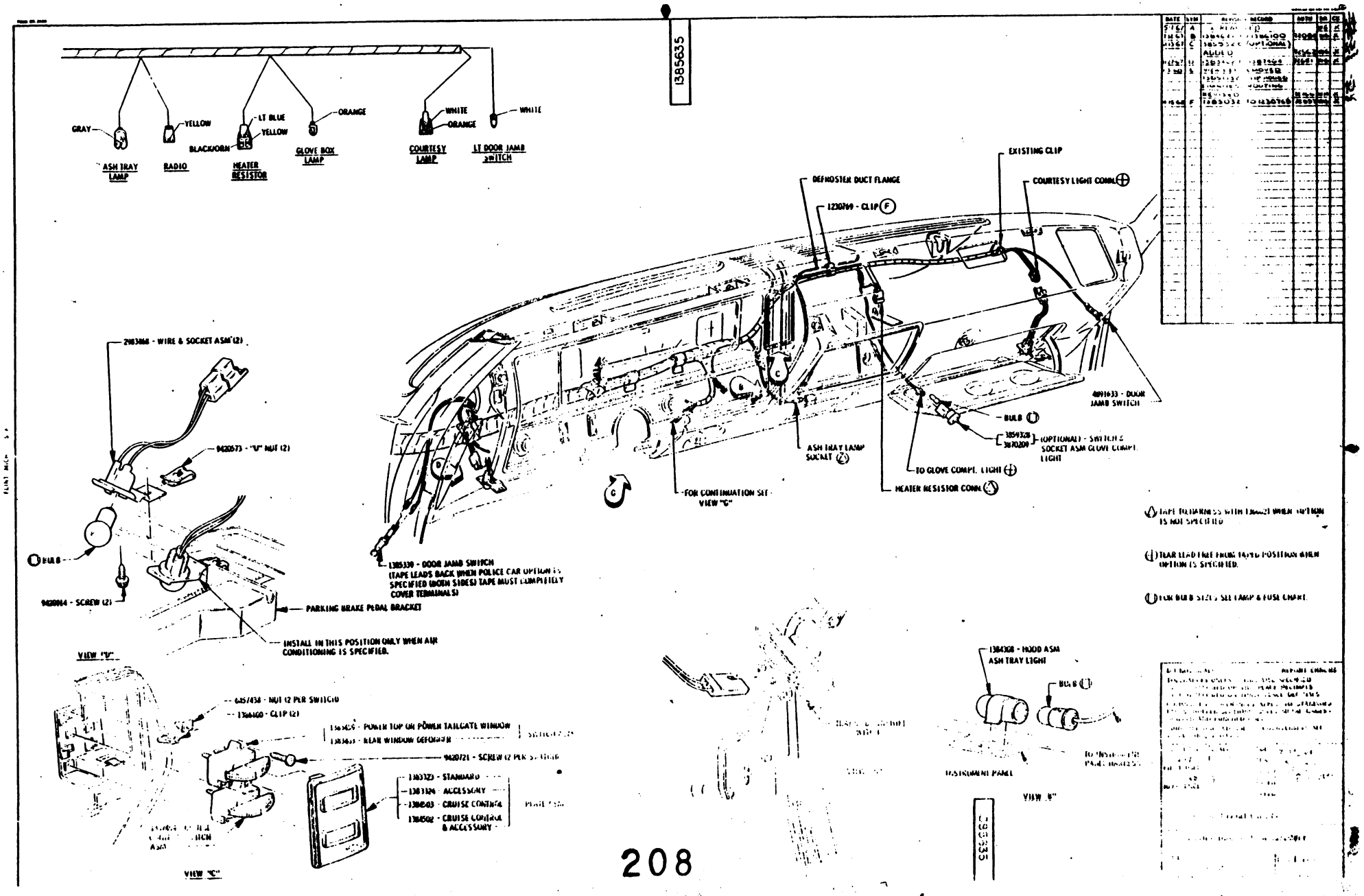

(A) TAPE HARNESS WITH TAPE WHEN OPTION IS NOT SPECIFIED

(B) TEAR LEAD FREE FROM TAPE POSITION WHEN OPTION IS SPECIFIED.

(C) FOR BULB SIZE, SEE LAMP & FUSE CHART.

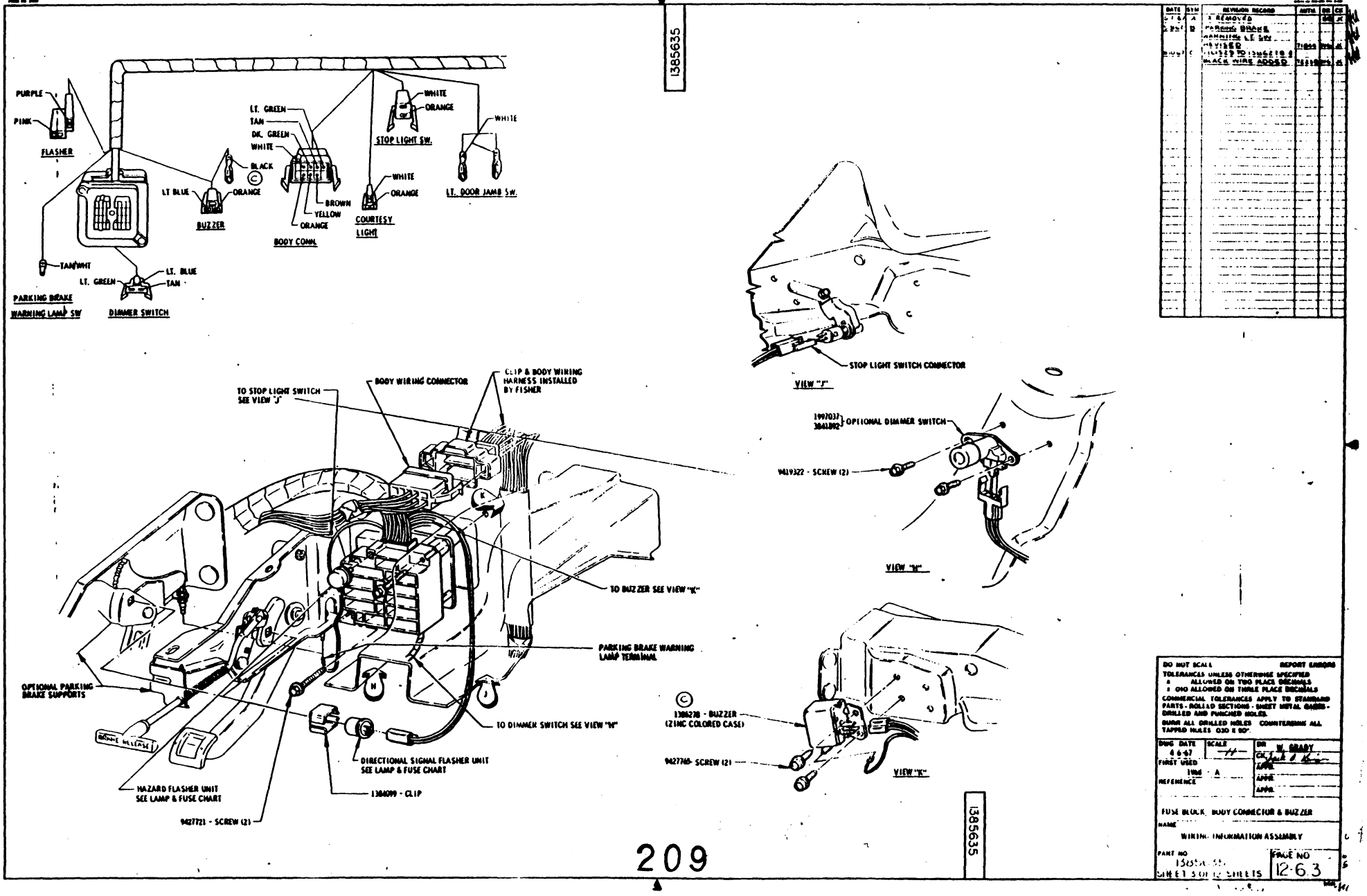

209

DAVE GRAHAM INC. - 2015
ALL RIGHTS RESERVED

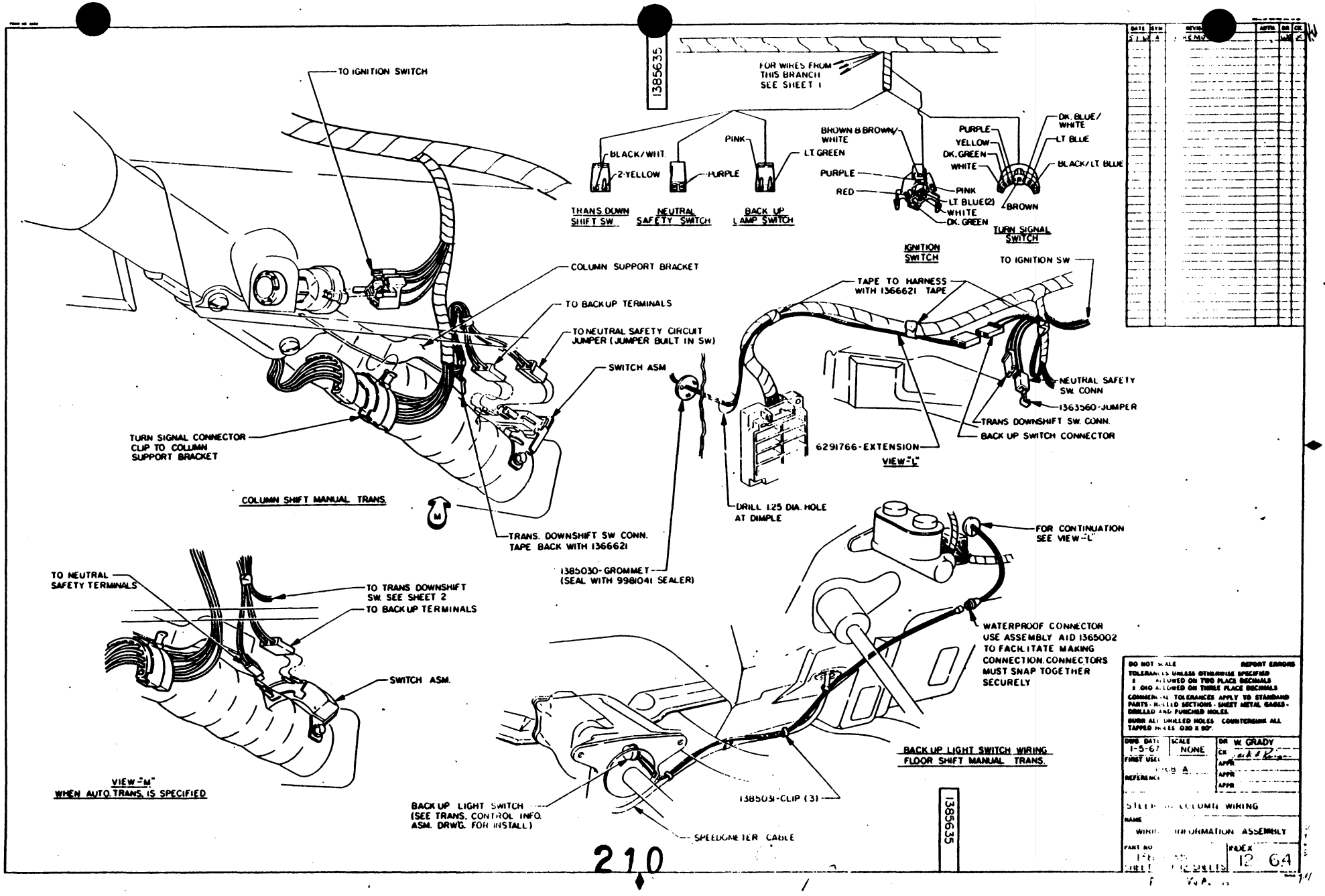

DAVE GRAHAM INC. - 2015
ALL RIGHTS RESERVED

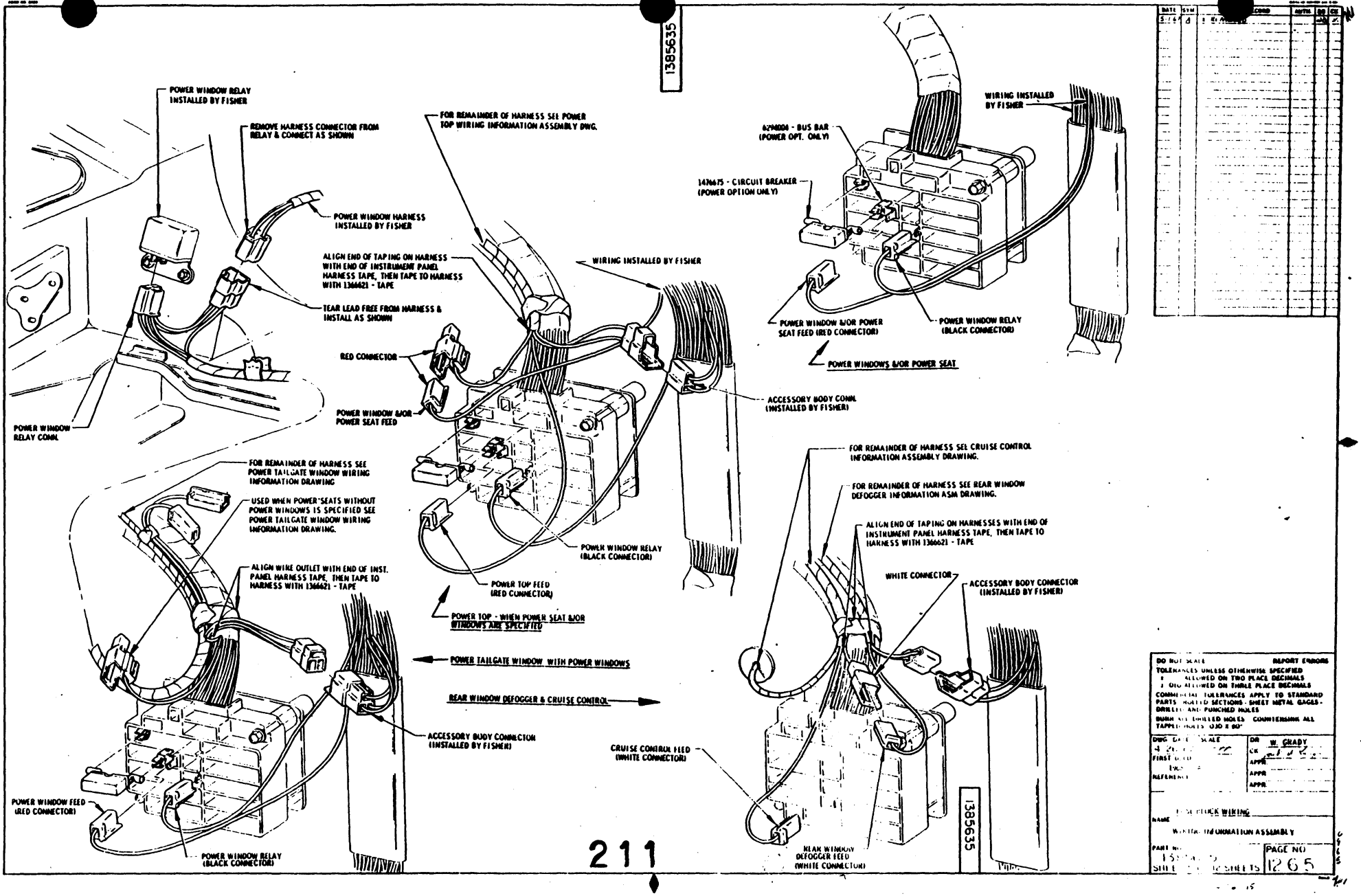

DAVE GRAHAM INC. - 2015
ALL RIGHTS RESERVED

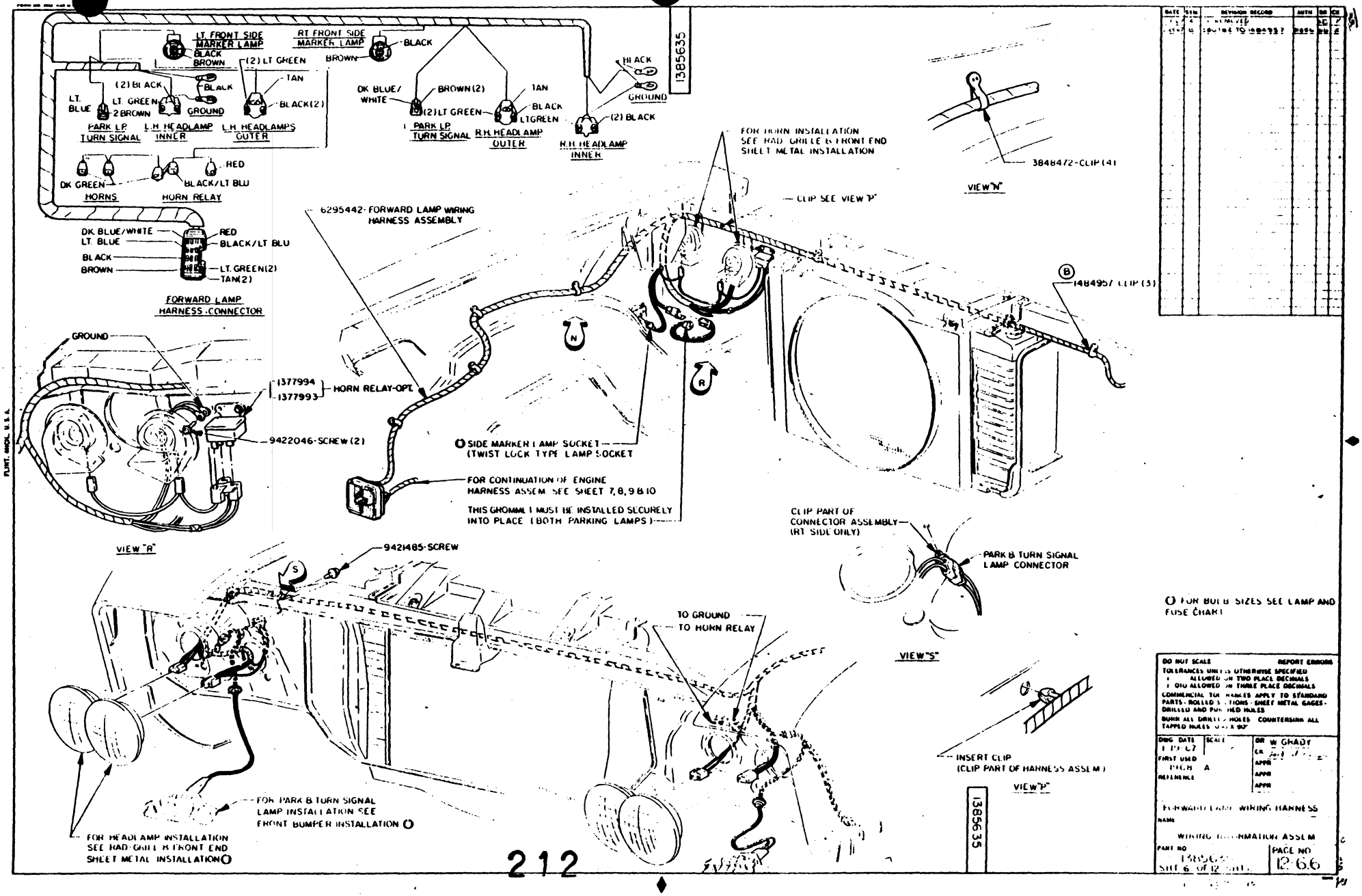

BUICK MOTOR DIVISION
GENERAL MOTORS CORPORATION
FLINT, MICH., U.S.A.

DAVE GRAHAM INC. - 2015
ALL RIGHTS RESERVED

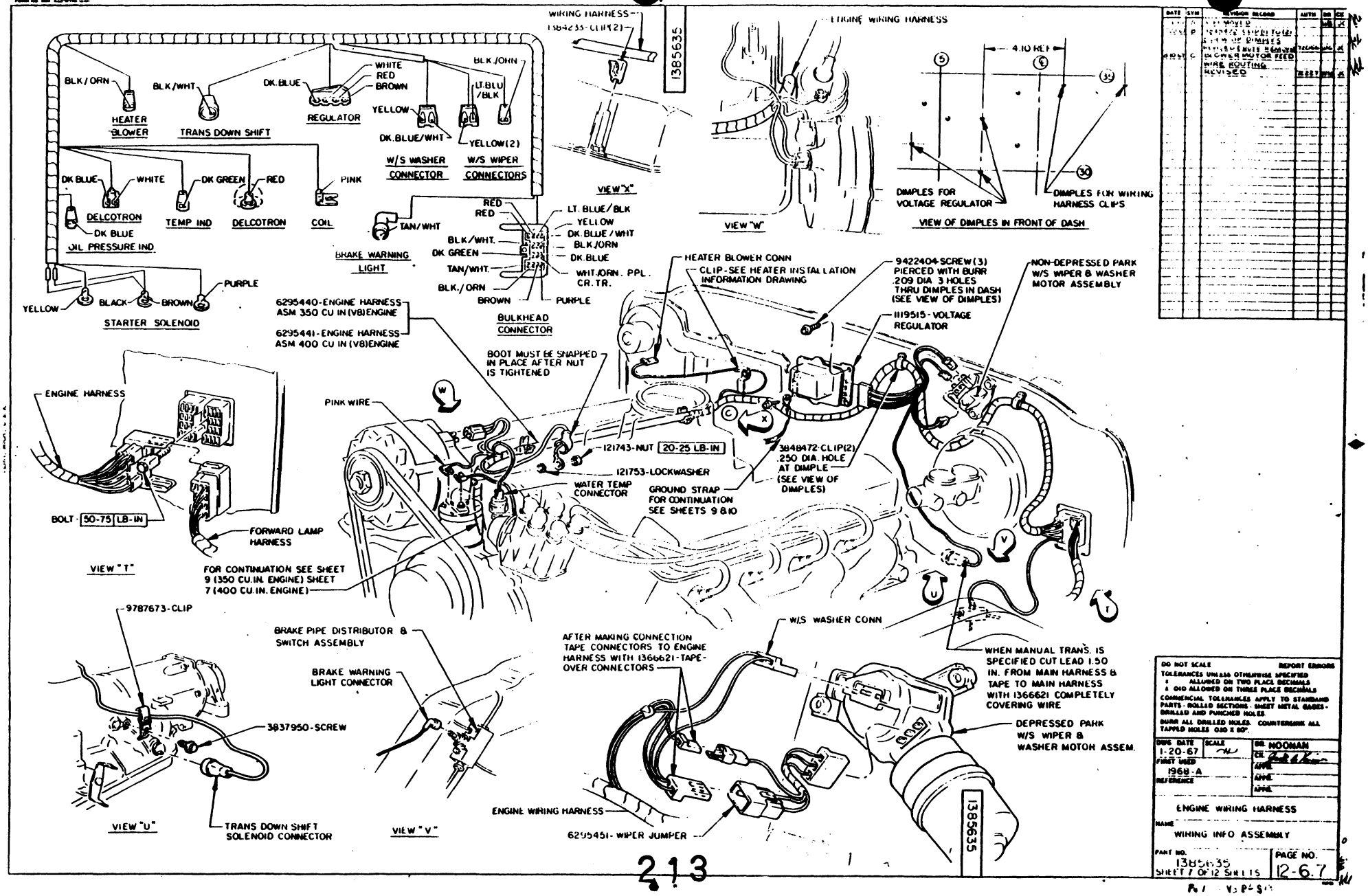

213

DAVE GRAHAM INC. - 2015
ALL RIGHTS RESERVED

DAVE GRAHAM INC. - 2015
ALL RIGHTS RESERVED

BUICK MOTOR DIVISION
GENERAL MOTORS CORPORATION
FLINT, MICH., U.S.A.

1385635

HARNESS MUST BE TIGHT BETWEEN THESE TWO CLIPS TO PREVENT HARNESS FROM CONTACTING EXHAUST MANIFOLD.

CLIP (PART OF ENGINE ASM)

DK. BLUE

WHITE

RED

121743 - NUT
20-25 LB-IN

BOOT MUST BE SNAPPED IN PLACE AFTER NUT IS TIGHTENED

121753 - LOCK WASHER

VIEW "Y"

WATER TEMP SWITCH CONN.

DK. GREEN

CLIP ⊛

VIEW "2" - WIRE ROUTING FOR DELCOTRON

CLIP

VIEW "C" - WIRE ROUTING FOR DELCOTRON WITH POWER STEERING PUMP

DATE	SYM	REVISION RECORD	AUTH	DR	CH
12/66	A	REMOVED			
12/66	B	CLIP & NOTES			
		ADDED			
	C	[illegible]			
		NOTE ADDED			
	D	VIEW "A" 400850			
11/68	E	12175[illegible] 10138678			

REMAINDER OF HARNESS SAME AS V-8 ENGINE (SEE SHEET #7)

SOLENOID CONNECTOR (AUTO TRANS. ONLY)

PINK TO POS (+) SIDE OF COIL

EXISTING SCREW

WHEN AIR CONDITIONING IS SPECIFIED CLIP IS NOT TO BE INSTALLED UNDER EXISTING SCREW. HARNESS IS TO LAY BETWEEN A/C COMPRESSOR MOUNTING BRACKET & ENGINE VALVE COVER.

CLIP PART OF WIRING HARNESS

BLACK TO NEG. (-) SIDE OF COIL

VOLTAGE REGULATOR

EXISTING SCREW

6295913 - ENGINE GROUND STRAP

EXISTING BOLT

OIL PRESSURE SWITCH CONN.

DK. BLUE

PURPLE

(E) 138479 - L/WASHER

BLACK

BROWN

YELLOW

PURPLE

YELLOW

138479 - L/WASHER

WIRES MUST BE ASSEMBLED TO STARTER SOLENOID & ROUTED AS SHOWN.

BATTERY CABLE

VIEW "A-P"

"AP"

RED (2)

6295439 - WIRING HARNESS ENGINE (LESS AUTO. TRANS.)

6294101 - WIRING HARNESS ENGINE (AUTO TRANS. ONLY)

1369798 - NUT
15-20 LB-IN

BLACK - BROWN

BATTERY CABLE FOR CONTINUATION SEE SHEET #9

115343 - NUT
96-144 LB-IN

138489 - L/WASHER

120614 - NUT
15-20 LB-IN

VIEW "Z" WIRE ROUTING FOR DELCOTRON WITH A.I.R. PUMP

CLIP

VIEW "C" WIRE ROUTING FOR DELCOTRON WITH POWER STEERING PUMP & AIR PUMP

⊛ CLOSE CLIP AFTER HARNESS IS INSTALLED.

DO NOT SCALE DRAWING — IMPORT ERRORS
TOLERANCES UNLESS OTHERWISE SPECIFIED
X ALLOWED ON TWO PLACE DECIMALS
X.XXX ALLOWED ON THREE PLACE DECIMALS
COMMERCIAL TOLERANCES APPLY TO STANDARD PARTS - MILLED SECTIONS SHEET METAL GAGES - DRILLED AND PUNCHED HOLES
BURR ALL DRILLED HOLES COUNTERSINK ALL TAPPED HOLES ONE X 80°

ORIG. DATE	4-15-67	SCALE	
FIRST USED	1968 - A		
REFERENCE			
DR	W. GRADY		
CK			
APPR			
APPR			
APPR			

E-8 ENGINE WIRING

NAME
WIRING INFORMATION ASSEMBLY

PART NO. 1385635 | PAGE NO. 1268
SHEET 8 OF 9 SHEETS

1385635

214

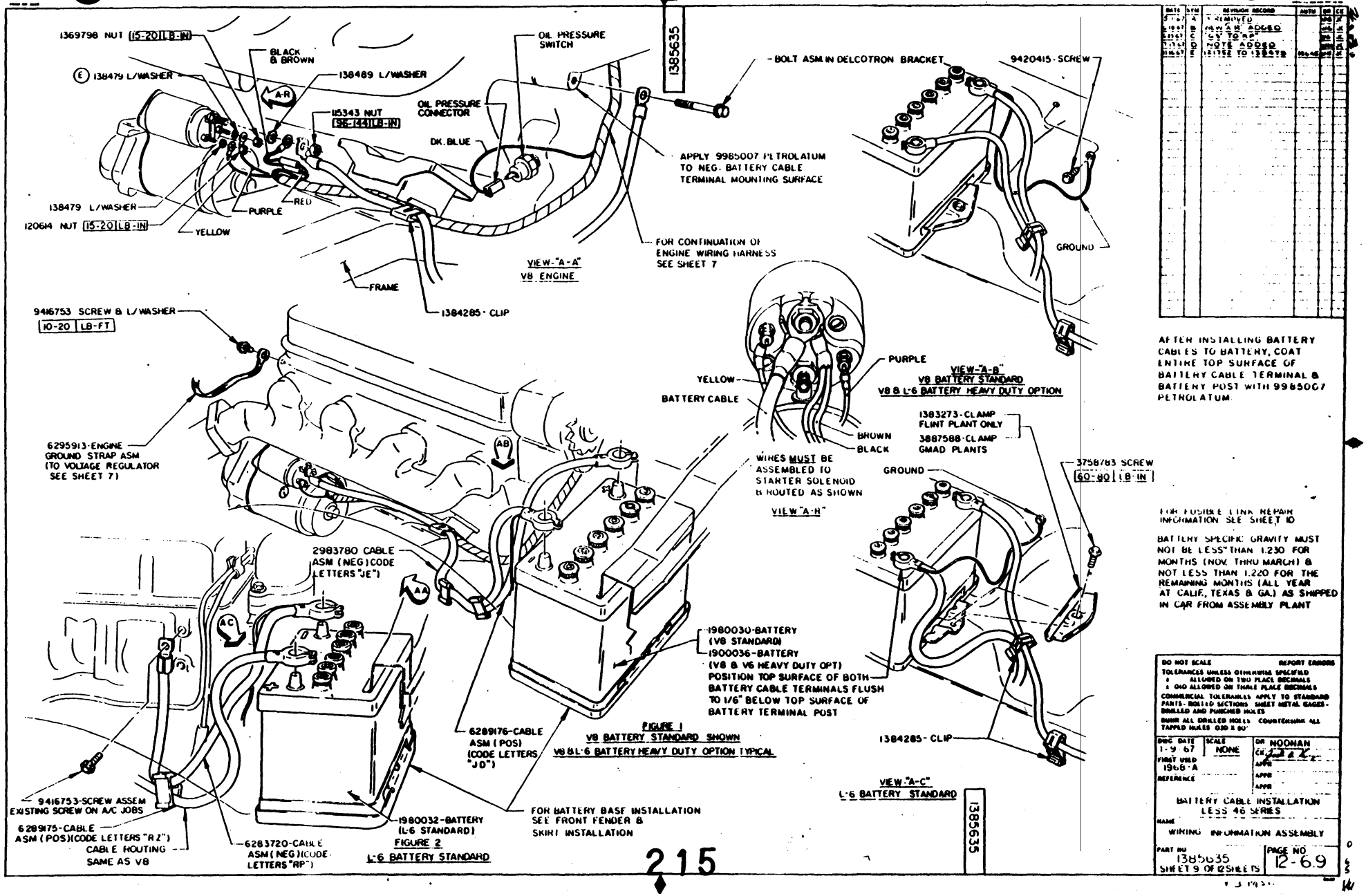

DAVE GRAHAM INC. - 2015
ALL RIGHTS RESERVED

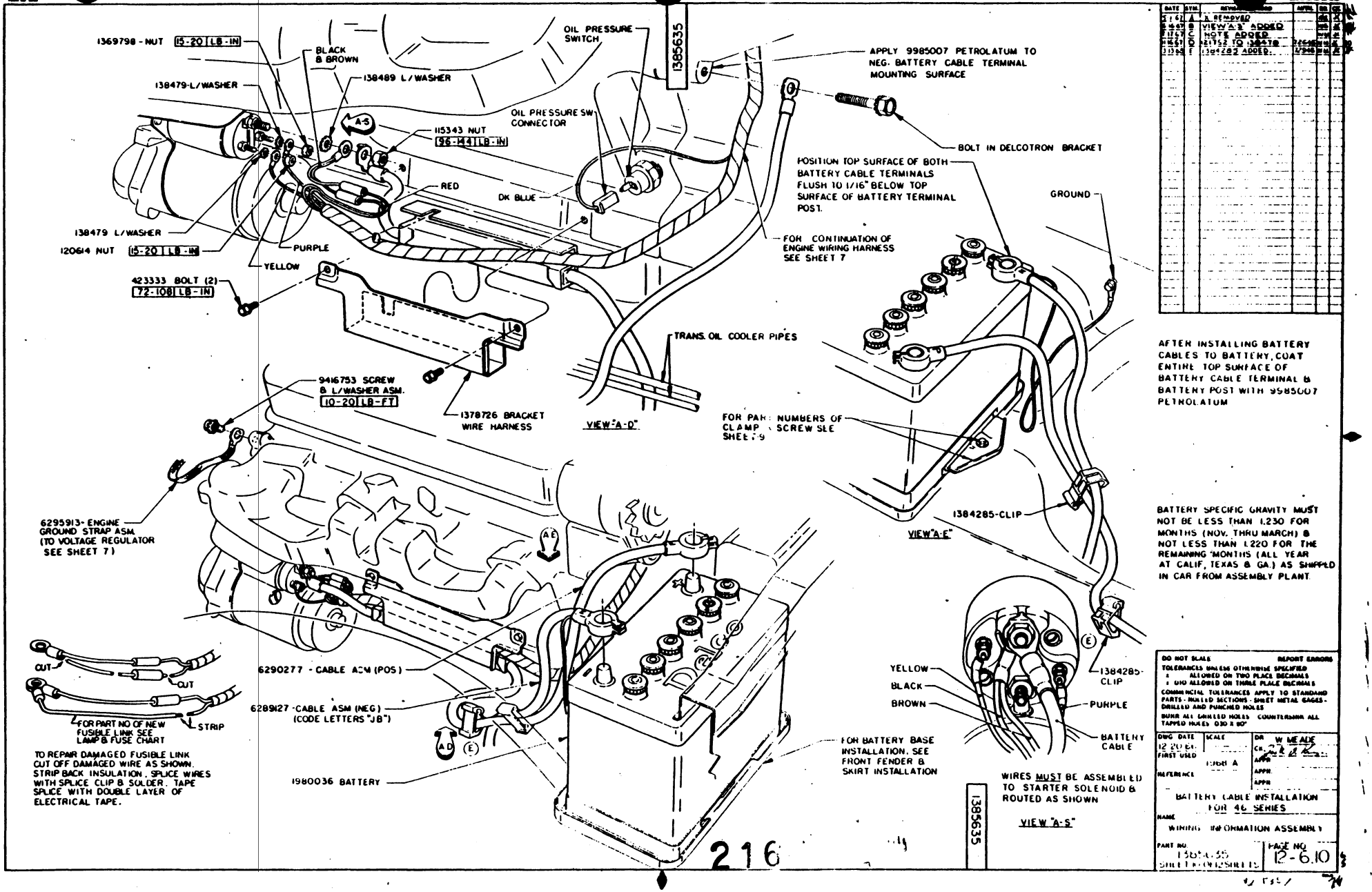

DAVE GRAHAM INC. - 2015
ALL RIGHTS RESERVED

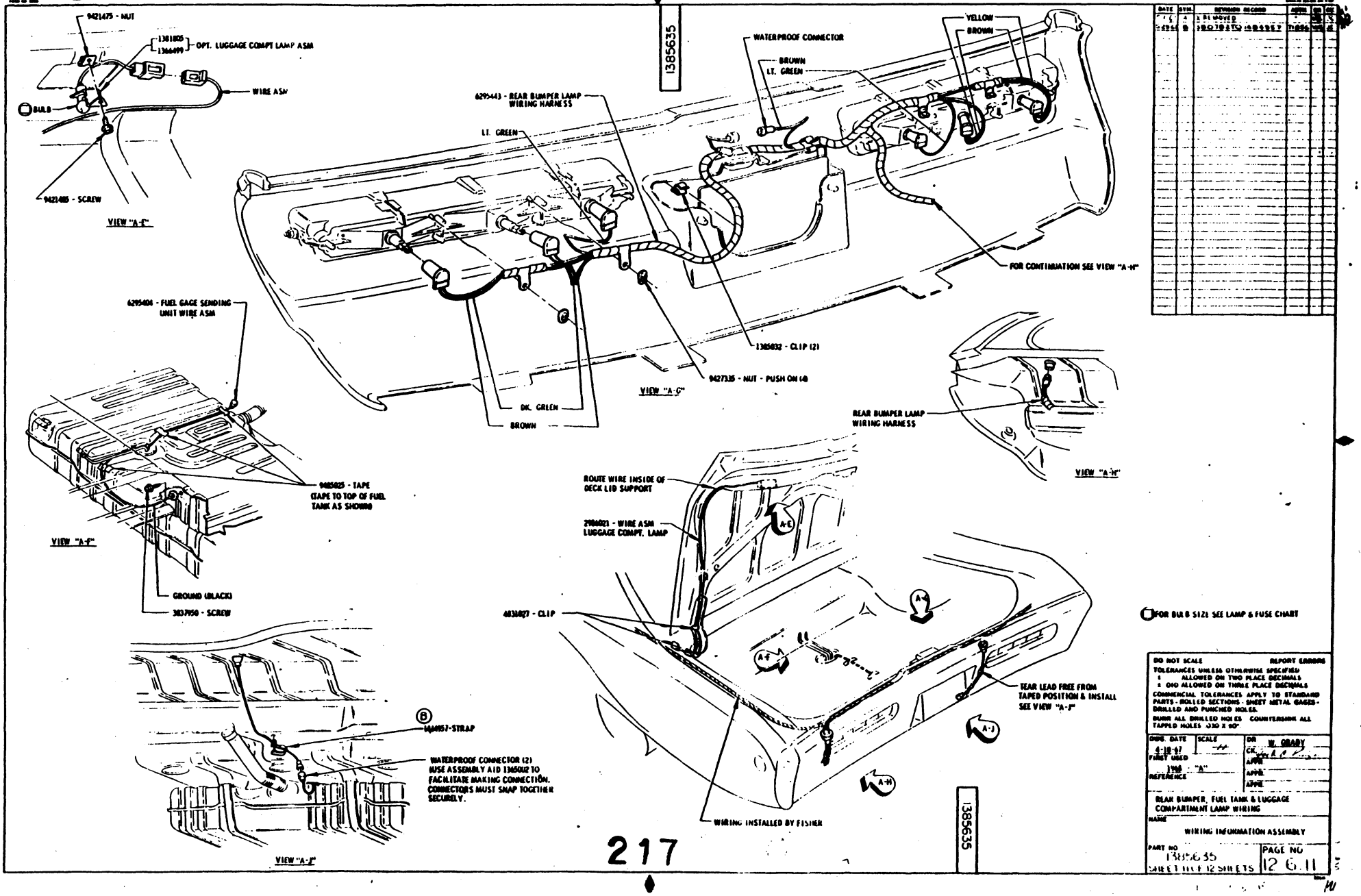

DAVE GRAHAM INC. - 2015
ALL RIGHTS RESERVED

DAVE GRAHAM INC. - 2015
ALL RIGHTS RESERVED

BUICK MOTOR DIVISION
GENERAL MOTORS CORPORATION
FLINT, MICH., U.S.A.

1385635

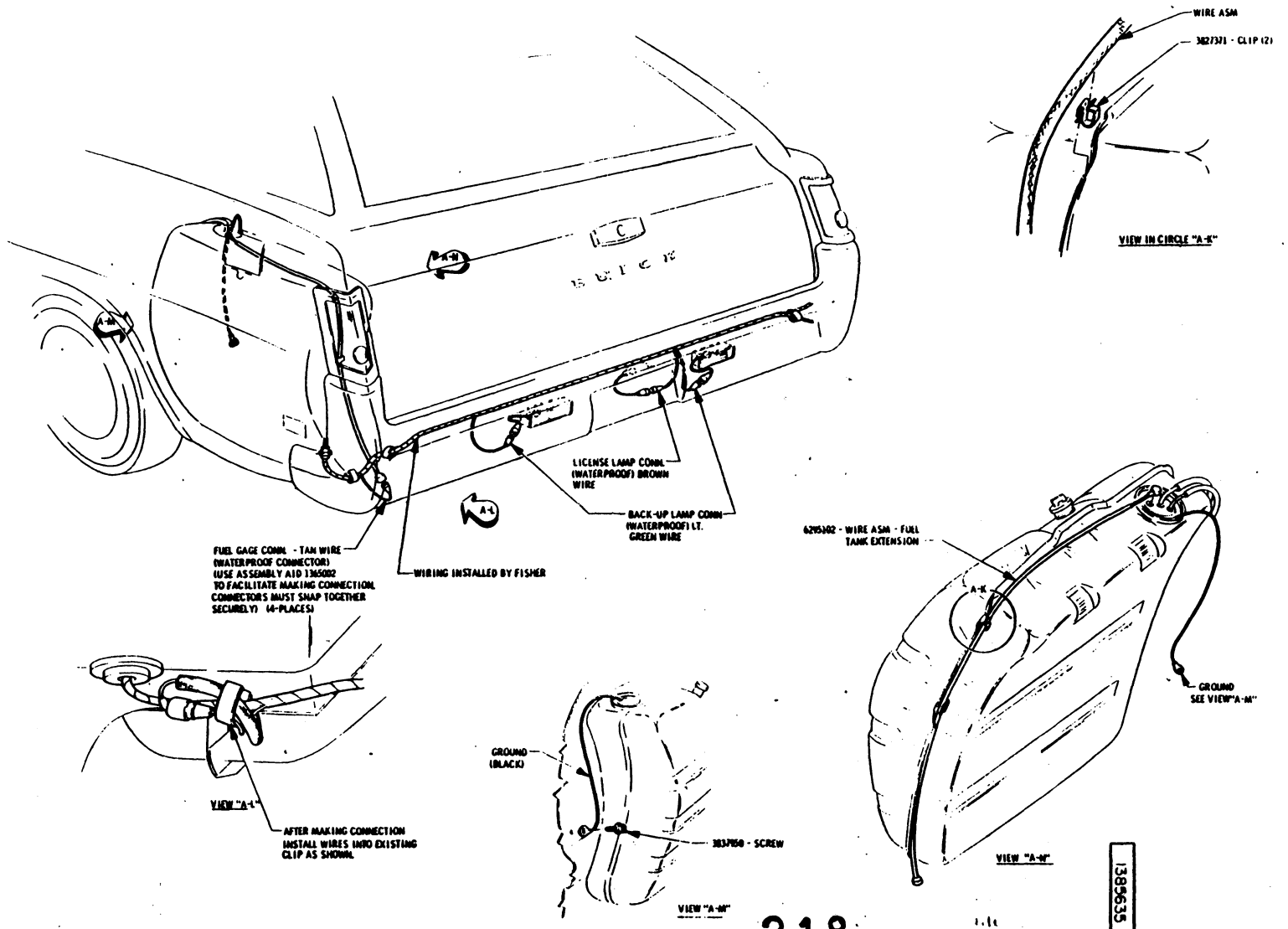

DATE	SYM	REVISION RECORD	AUTH	DR	CK
	A	REMOVED			

DO NOT SCALE — REPORT ERRORS
TOLERANCES UNLESS OTHERWISE SPECIFIED
± ALLOWED ON TWO PLACE DECIMALS
± .010 ALLOWED ON THREE PLACE DECIMALS
COMMERCIAL TOLERANCES APPLY TO STANDARD PARTS - ROLLED SECTIONS - SHEET METAL GAGES - DRILLED AND PUNCHED HOLES.
BURR ALL DRILLED HOLES. COUNTERSINK ALL TAPPED HOLES .030 X 90°.

DWG DATE	SCALE	DR W. GRADY
4 26 67		CK
FIRST USED 1968 "A"		APPR
REFERENCE		APPR
		APPR

LICENSE LAMP, BACK UP LAMP & FUEL GAGE WIRE - WAGONS

NAME: WIRING INFORMATION ASSEMBLY

PART NO. 1385635 — SHEET 12 OF 12 SHEETS — PAGE NO. 12.612

1385635

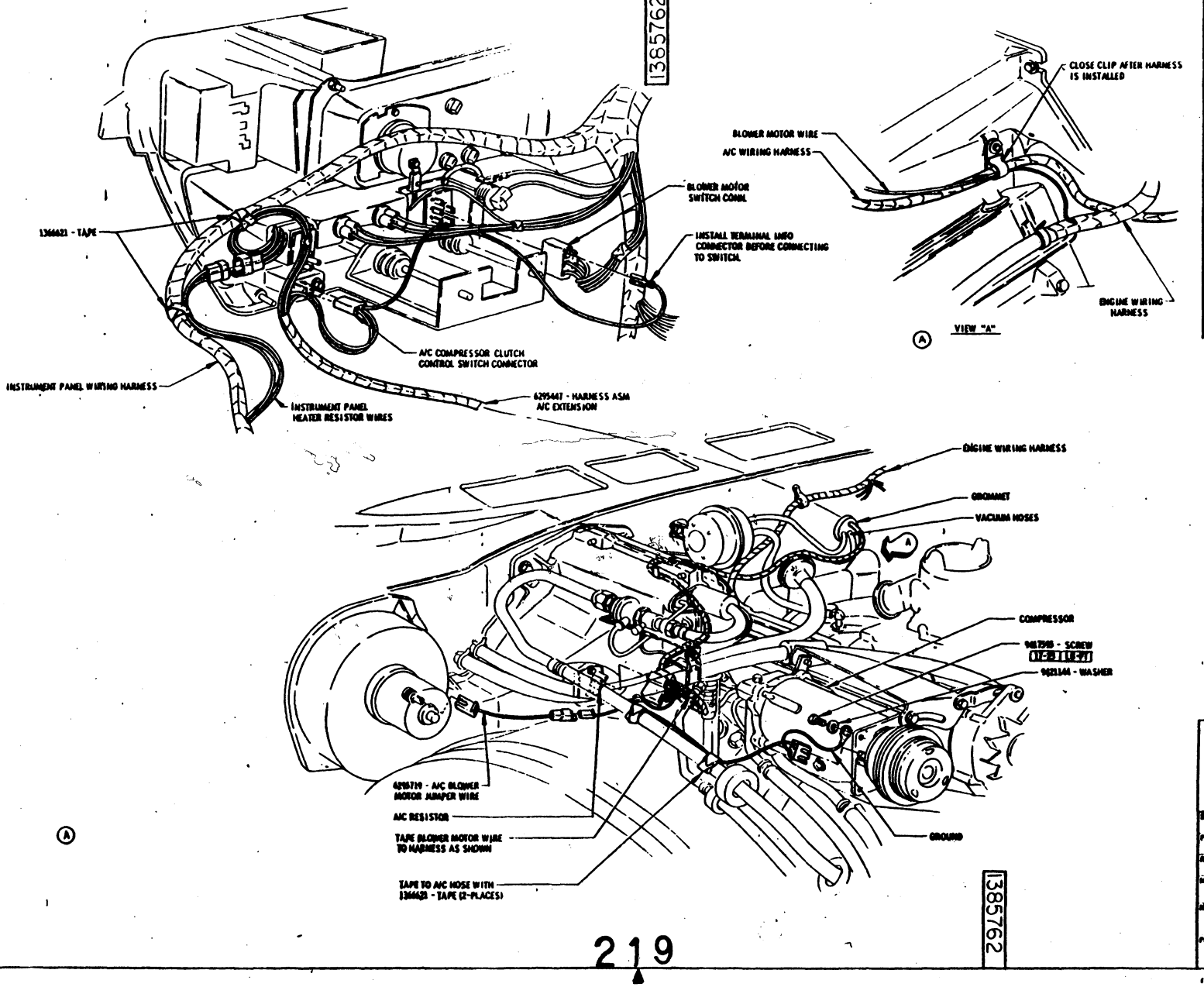

DATE	SYM	REVISION RECORD	APPR	DR	CK
10-01	A	VIEW OF L6 & P8 ENGINE REMOVED VIEW A ADDED			

DO NOT SCALE — REPORT ERRORS
TOLERANCES UNLESS OTHERWISE SPECIFIED
± ALLOWED ON TWO PLACE DECIMALS
± .010 ALLOWED ON THREE PLACE DECIMALS
COMMERCIAL TOLERANCES APPLY TO STANDARD PARTS - ROLLED SECTIONS - SHEET METAL GAGES - DRILLED AND PUNCHED HOLES.
BREAK ALL DRILLED HOLES. COUNTERSINK ALL TAPPED HOLES .030 X 90°.

DRWN. DATE 3-1-67	SCALE ---	DR. W. GRAHAM	
FIRST USED		CK.	
1968 A		APPR.	
REFERENCE		APPR.	
MATERIAL SPEC.			

NAME: WIRING INFORMATION ASSEMBLY AIR CONDITIONING

PART NO. 1385762 — PAGE NO. 12-71

DAVE GRAHAM INC. - 2015
ALL RIGHTS RESERVED

DAVE GRAHAM INC. - 2015
ALL RIGHTS RESERVED

BUICK MOTOR DIVISION
GENERAL MOTORS CORPORATION
FLINT, MICH., U.S.A.

1385570

DATE	SYM	REVISION RECORD	AUTH	DR	CK

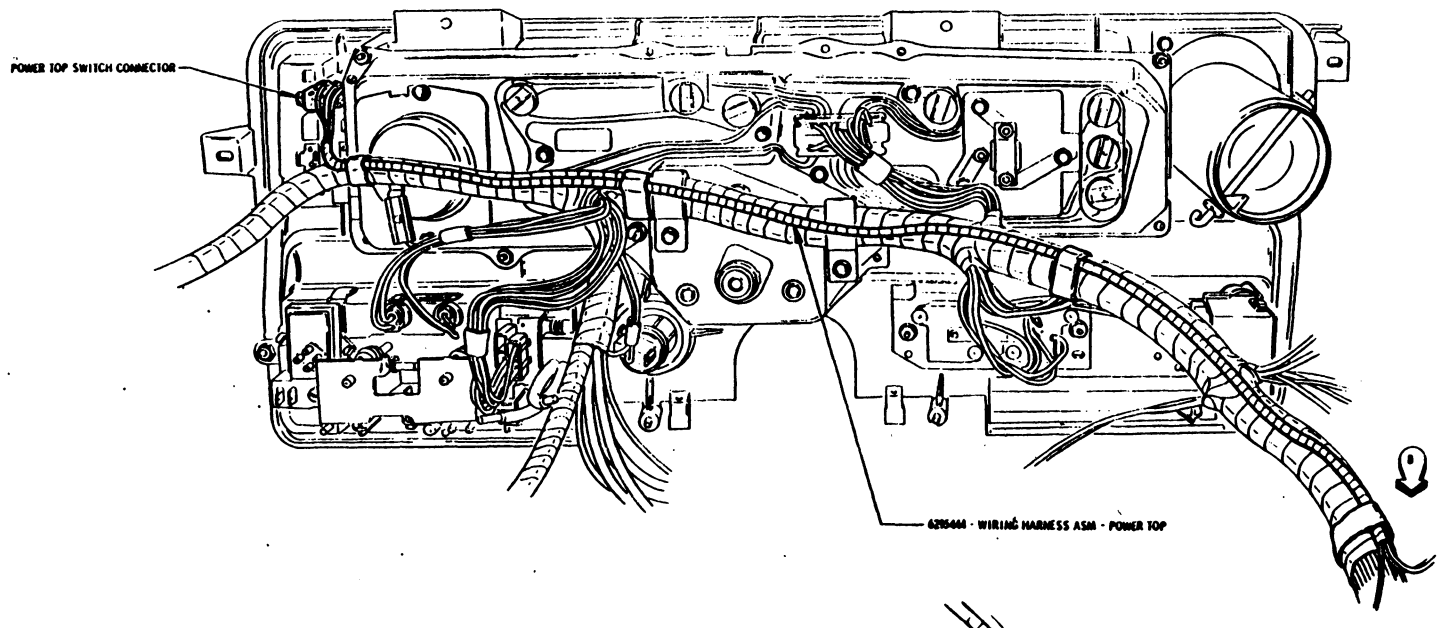

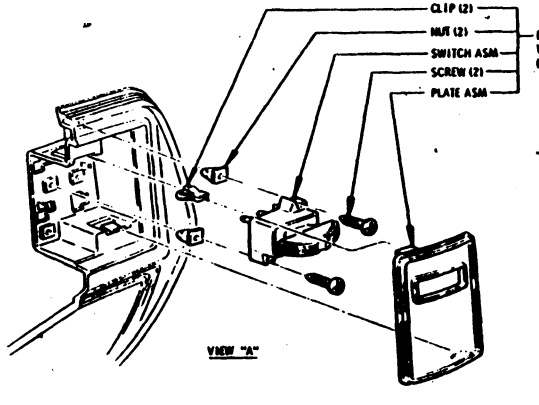

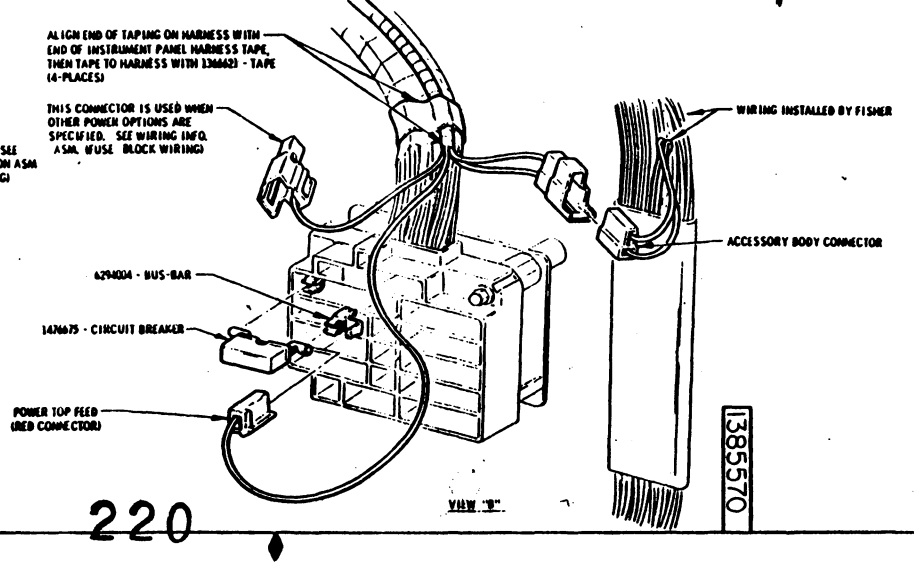

1385570

DO NOT SCALE — REPORT ERRORS
TOLERANCES UNLESS OTHERWISE SPECIFIED
± ALLOWED ON TWO PLACE DECIMALS
± .010 ALLOWED ON THREE PLACE DECIMALS
COMMERCIAL TOLERANCES APPLY TO STANDARD PARTS - ROLLED SECTIONS - SHEET METAL GAGES - DRILLED AND PUNCHED HOLES.
BURR ALL DRILLED HOLES. COUNTERSINK ALL TAPPED HOLES .030 X 90°.

DWG. DATE	SCALE	DR. R. HICKEY
4-28-67	—	CK.
FIRST USED		APPR.
1968 - A		APPR.
REFERENCE		APPR.
MATERIAL SPEC.		

NAME: POWER TOP WIRING INFORMATION ASM

PART NO. 1385570 | PAGE NO. 12-91

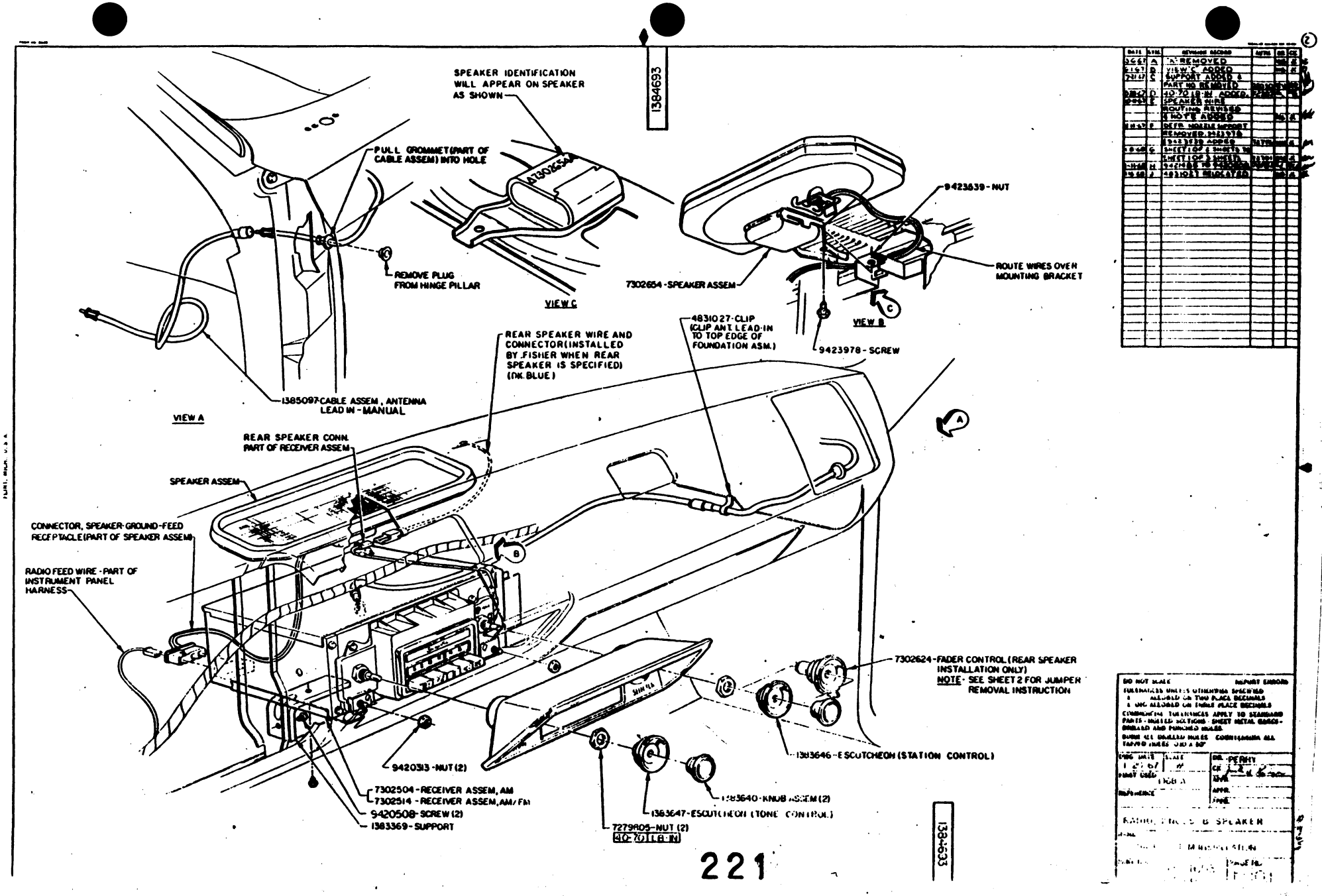

221

DAVE GRAHAM INC. - 2015
ALL RIGHTS RESERVED

1384633

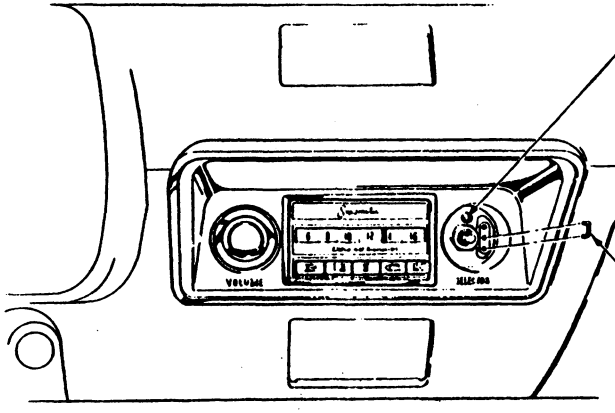

RADIO ANTENNA TRIMMER SCREW ADJUSTMENT
ADJUSTMENT MUST BE MADE WITH ANTENNA MAST EXTENDED THIRTY-ONE (31) INCHES ABOVE FENDER. TUNE RADIO TO A STATION AT OR NEAR 1400 KC THAT CAN BARELY BE HEARD WITH VOLUME FULL ON. (A PROPERLY ADJUSTED SIGNAL GENERATOR MAY BE SUBSTITUTED). INSERT A SCREWDRIVER THROUGH THE OPENING IN THE RECEIVER AND SLOWLY TURN THE TRIMMER SCREW BACK AND FORTH UNTIL THE POSITION IS FOUND THAT GIVES MAXIMUM VOLUME. ADJUST TRIMMER ON AM/FM SETS IN AM POSITION ONLY.

NOTE-
MAKE ANTENNA TRIMMER ADJUSTMENT PRIOR TO REMOVING JUMPER ON REAR SPEAKER INSTALLATIONS.

JUMPER WILL BE ON ALL SETS. FOR INSTALLATION OF FADER CONTROL, REMOVE WITH TWEEZERS OR SMALL NEEDLE-NOSE PLIERS.

CAUTION

DO NOT OPERATE RADIO WITHOUT JUMPER OR FADER IN POSITION.

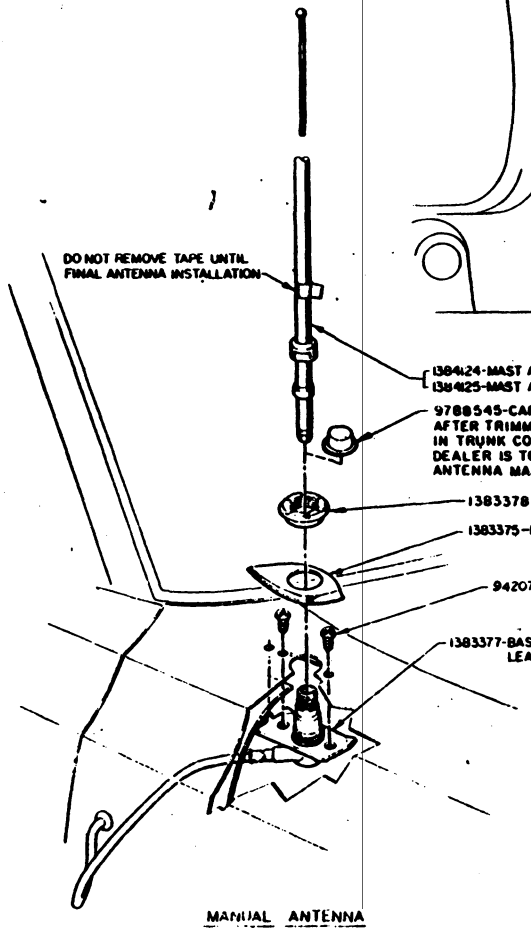

MANUAL ANTENNA

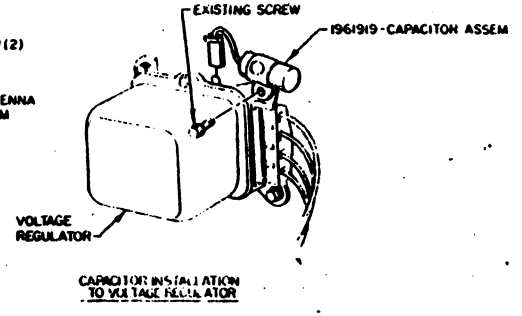

CAPACITOR INSTALLATION TO VOLTAGE REGULATOR

1384633

DAVE GRAHAM INC. - 2015
ALL RIGHTS RESERVED

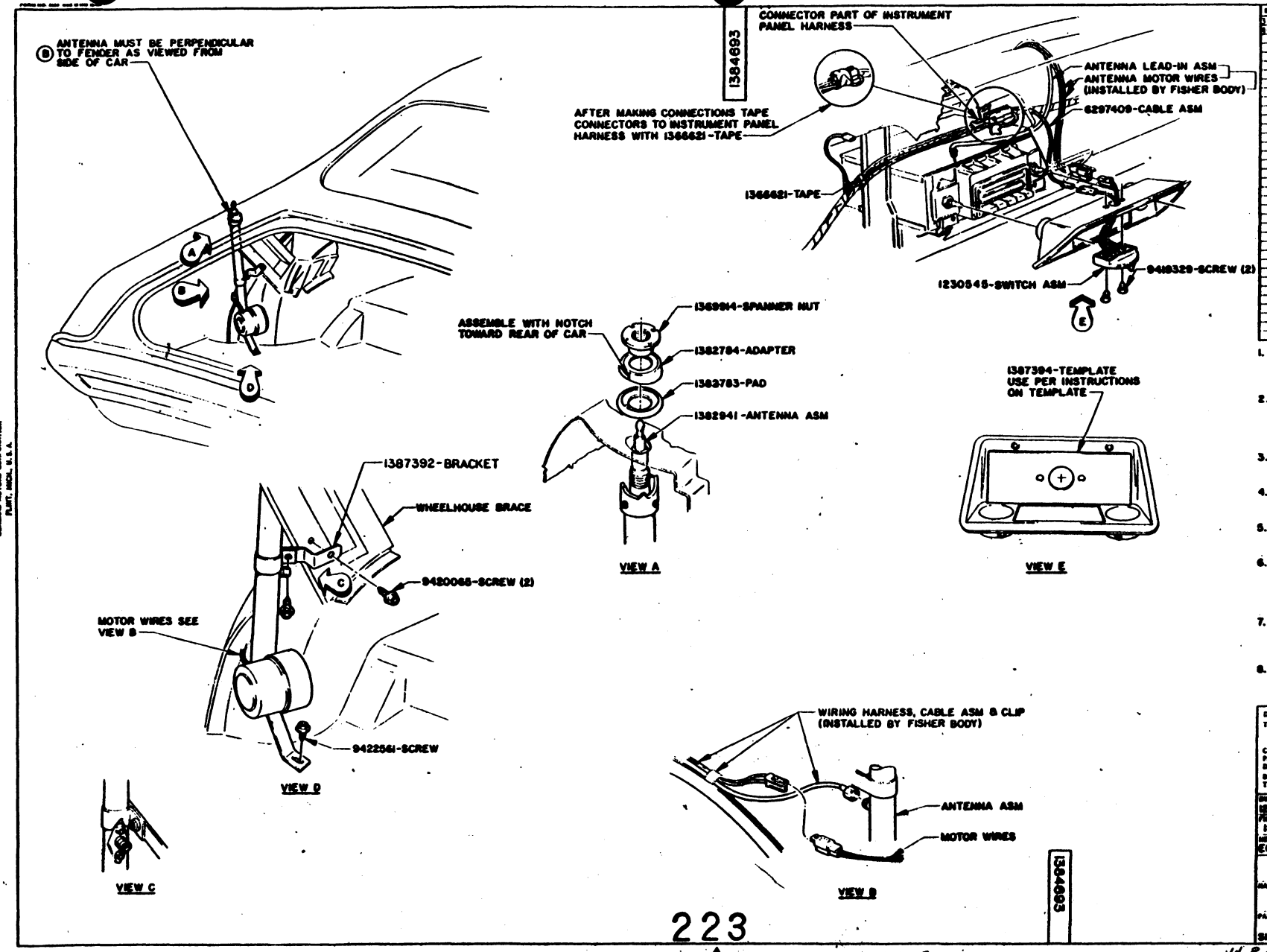

DATE	SYM.	REVISION RECORD	APPR.	CK.	DR.
3-21-68	A	1387393 TO 1230545	[illegible]	[illegible]	[illegible]
8-14-68	B	NOTE ADDED	[illegible]	[illegible]	[illegible]

1. ASSEMBLE CLAMPING BRACKET TO ANTENNA, NESTING THE LEAD-IN FITTING IN NOTCH IN BRACKET-VIEW C
2. INSERT ELECTRIC ANTENNA IN FENDER. LOOSE ASSEMBLE MTG CLAMP SCREW TO REAR WHEELHOUSE BRACE DO NOT TIGHTEN.
3. PLACE PAD ADAPTER & SPANNER NUT ON ANTENNA & TIGHTEN TO 50-60 LB-IN, VIEW A.
4. CONNECT ANTENNA MOTOR WIRES & ANTENNA LEAD-IN CABLE & TIGHTEN TO 20-30 LB-IN, VIEW B.
5. TIGHTEN MOUNTING CLAMP SCREW TO REAR WHEELHOUSE BRACE.
6. RUN ANTENNA UP TO FULLY EXTENDED HEIGHT & BEND MOUNTING CLAMP SO THAT ANTENNA IS VERTICAL AS VIEWED FROM REAR OF CAR.
7. BEND LOWER BRACKET DOWN TO TRUNK FLOOR & INSTALL SELF DRILLING SCREW THROUGH BRACKET INTO TRUNK FLOOR.
8. TEST ANTENNA BY OPERATING UP & DOWN SEVERAL TIMES & TRIM RADIO TO ANTENNA.

DO NOT SCALE — REPORT ERRORS
TOLERANCES UNLESS OTHERWISE SPECIFIED
± ALLOWED ON TWO PLACE DECIMALS
± .010 ALLOWED ON THREE PLACE DECIMALS
COMMERCIAL TOLERANCES APPLY TO STANDARD PARTS - ROLLED SECTIONS - SHEET METAL GAGES - DRILLED AND PUNCHED HOLES.
BURR ALL DRILLED HOLES. COUNTERSINK ALL TAPPED HOLES .030 X 90°.

DWG. DATE 12-19-67	SCALE —	DR. R. SHIER
FIRST USED 1968-A		CK. [illegible]
REFERENCE ECR 72701		APPR. [illegible]
		APPR.

POWER ANTENNA & SWITCH

NAME RADIO SYSTEM INSTALLATION

PART NO. 1384693 SHEET 3 OF 3 SHEETS — PAGE NO. 12-10.3

BUICK MOTOR DIVISION
GENERAL MOTORS CORPORATION
FLINT, MICH., U.S.A.

V4 P 3 515

DAVE GRAHAM INC. - 2015
ALL RIGHTS RESERVED

DAVE GRAHAM INC. - 2015
ALL RIGHTS RESERVED

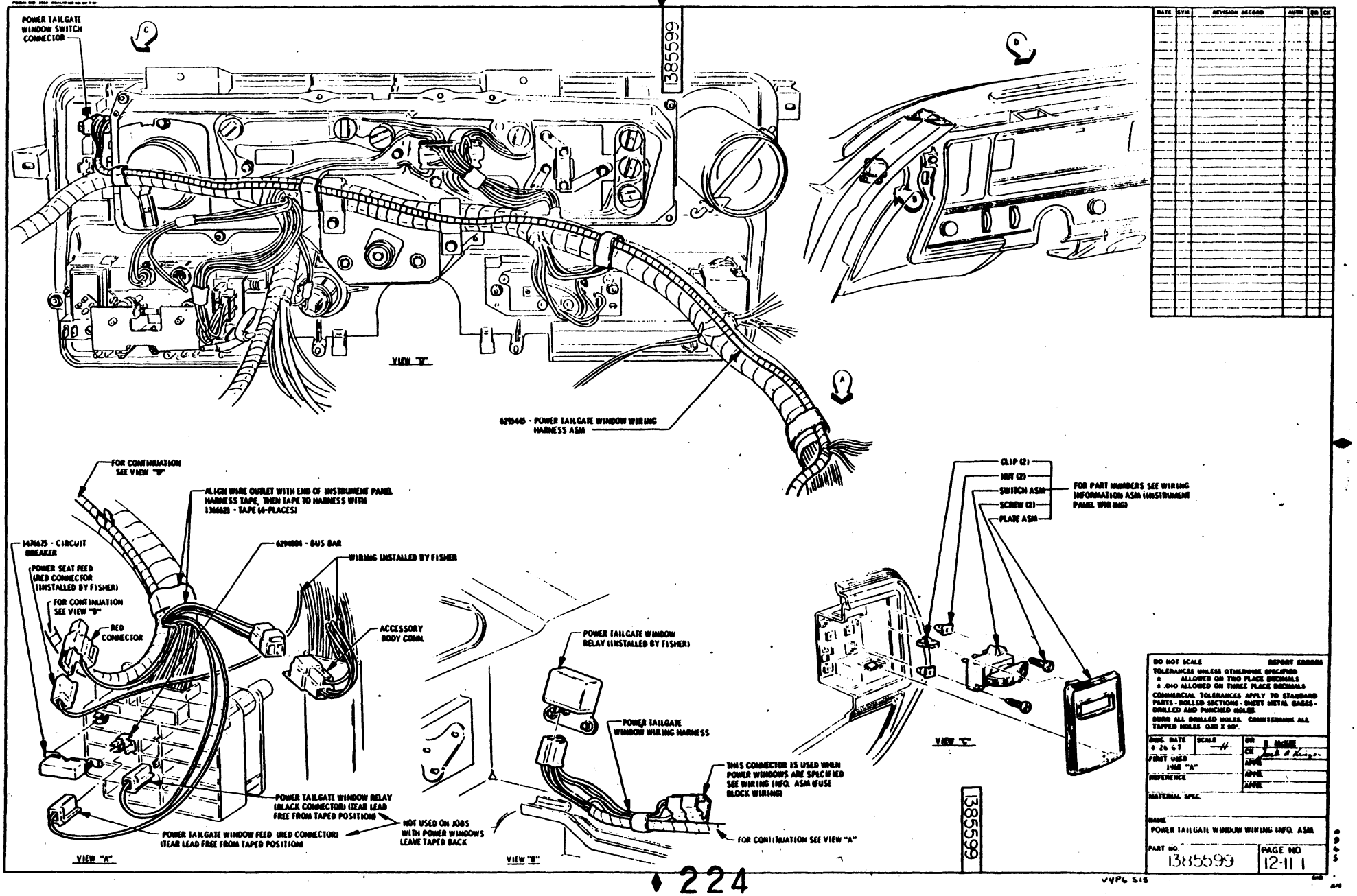

DATE	SYM	REVISION RECORD	AUTH	DR	CK

DO NOT SCALE — REPORT ERRORS
TOLERANCES UNLESS OTHERWISE SPECIFIED
.X ALLOWED ON TWO PLACE DECIMALS
.XXO ALLOWED ON THREE PLACE DECIMALS
COMMERCIAL TOLERANCES APPLY TO STANDARD PARTS - ROLLED SECTIONS - SHEET METAL GAGES - DRILLED AND PUNCHED HOLES
BREAK ALL DRILLED HOLES. COUNTERBORE ALL TAPPED HOLES .030 X 90°.

ENG. DATE	SCALE	DR.
6 26 67	—	CK.
FIRST USED		APPR.
1968 "A"		APPR.
REFERENCE		APPR.

MATERIAL SPEC.

NAME
POWER TAILGATE WINDOW WIRING HRN. ASM.

PART NO. 1385599 — PAGE NO. 12-11 1

VVPG 518

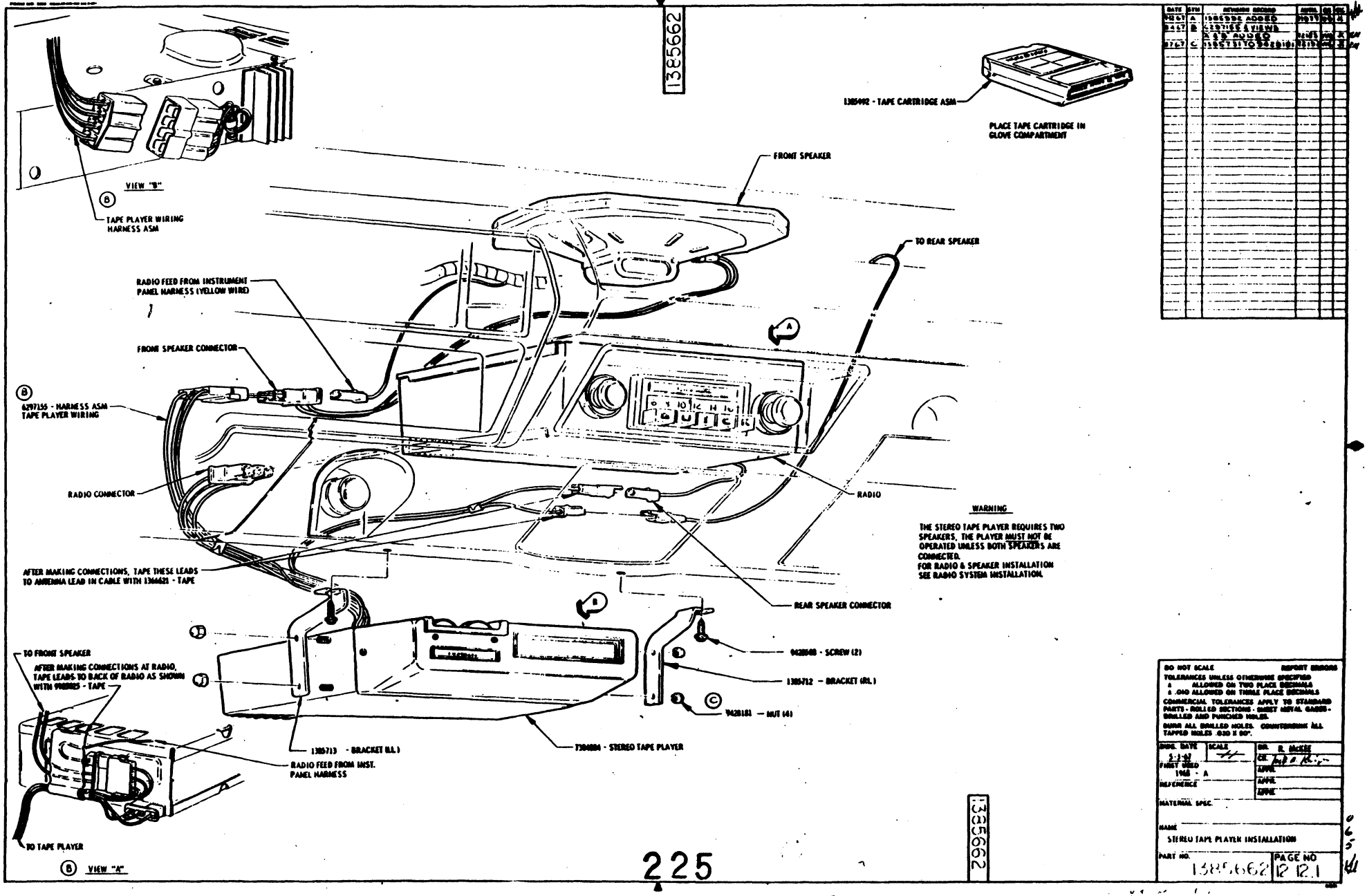

DATE	SYM	REVISION RECORD	APPR.	CK.	ENG.
10-67	A	1385662 ADDED	[illegible]	[illegible]	[illegible]
3-67	B	1385155 & 1385168 ADDED	[illegible]	[illegible]	[illegible]
3-67	C	1385731 TO 1385735 ADDED	[illegible]	[illegible]	[illegible]

DO NOT SCALE — REPORT ERRORS

TOLERANCES UNLESS OTHERWISE SPECIFIED
± ALLOWED ON TWO PLACE DECIMALS
± .010 ALLOWED ON THREE PLACE DECIMALS
COMMERCIAL TOLERANCES APPLY TO STANDARD PARTS - ROLLED SECTIONS - SHEET METAL GAGES - DRILLED AND PUNCHED HOLES.
DEBUR ALL DRILLED HOLES. COUNTERSINK ALL TAPPED HOLES .030 X 90°.

ENG. DATE	SCALE	DR. R. McKEE
2-1-67		CK.
FIRST USED 1968 - A		APPR.
REFERENCE		APPR.
		APPR.

MATERIAL SPEC.

NAME STEREO TAPE PLAYER INSTALLATION

PART NO. 1385662 PAGE NO 12 12.1

BUICK MOTOR DIVISION
GENERAL MOTORS CORPORATION
FLINT, MICH., U.S.A.

DAVE GRAHAM INC. - 2015
ALL RIGHTS RESERVED

DAVE GRAHAM INC. - 2015
ALL RIGHTS RESERVED

BUICK MOTOR DIVISION
GENERAL MOTORS CORPORATION
FLINT, MICH., U.S.A.

1385066

DATE	SYM.	REVISED RECORD	APPR.	DR.	CK.

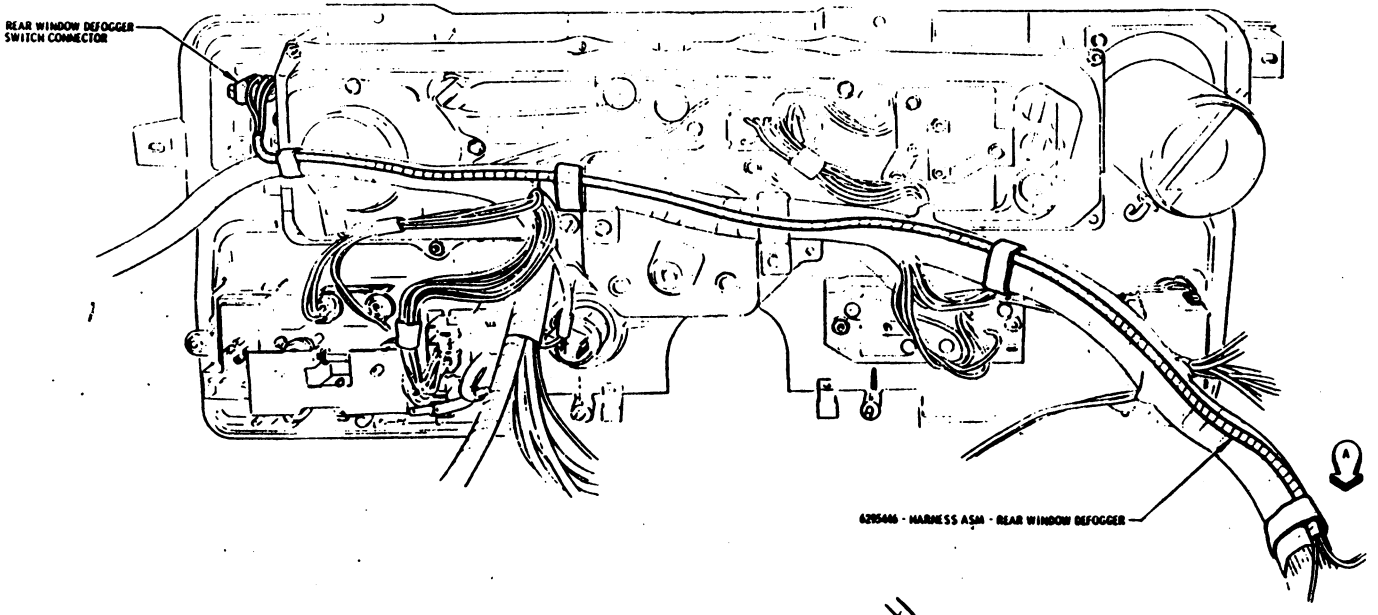

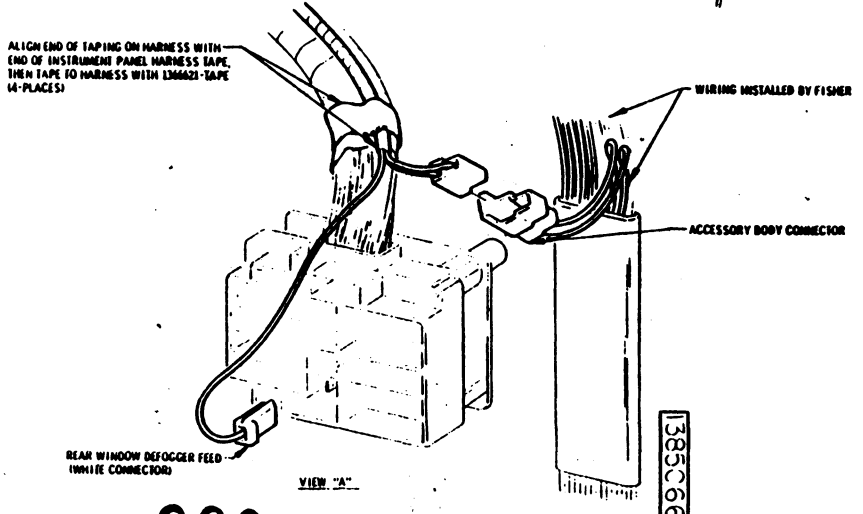

VIEW "A"

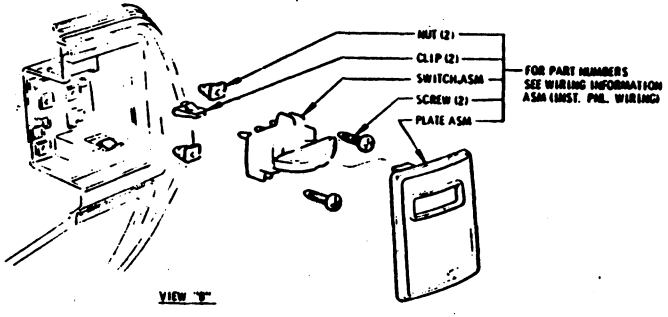

VIEW "B"

1385066

DO NOT SCALE — REPORT ERRORS
TOLERANCES UNLESS OTHERWISE SPECIFIED
± .01 ALLOWED ON TWO PLACE DECIMALS
± .005 ALLOWED ON THREE PLACE DECIMALS
COMMERCIAL TOLERANCES APPLY TO STANDARD PARTS - ROLLED SECTIONS - SHEET METAL GAGES - DRILLED AND PUNCHED HOLES.
DIMN ALL DRILLED HOLES COUNTERSINK ALL TAPPED HOLES 030 X 90°

DWG. DATE 4 14 67	SCALE	DR. B McKEE	
FIRST USED 1968 - A		CK.	
REFERENCE		APPR.	
		APPR.	
		APPR.	
MATERIAL SPEC.			

NAME: WIRING INFORMATION ASM - REAR WINDOW DEFOGGER

PART NO. 1385066 | PAGE NO. 12 131

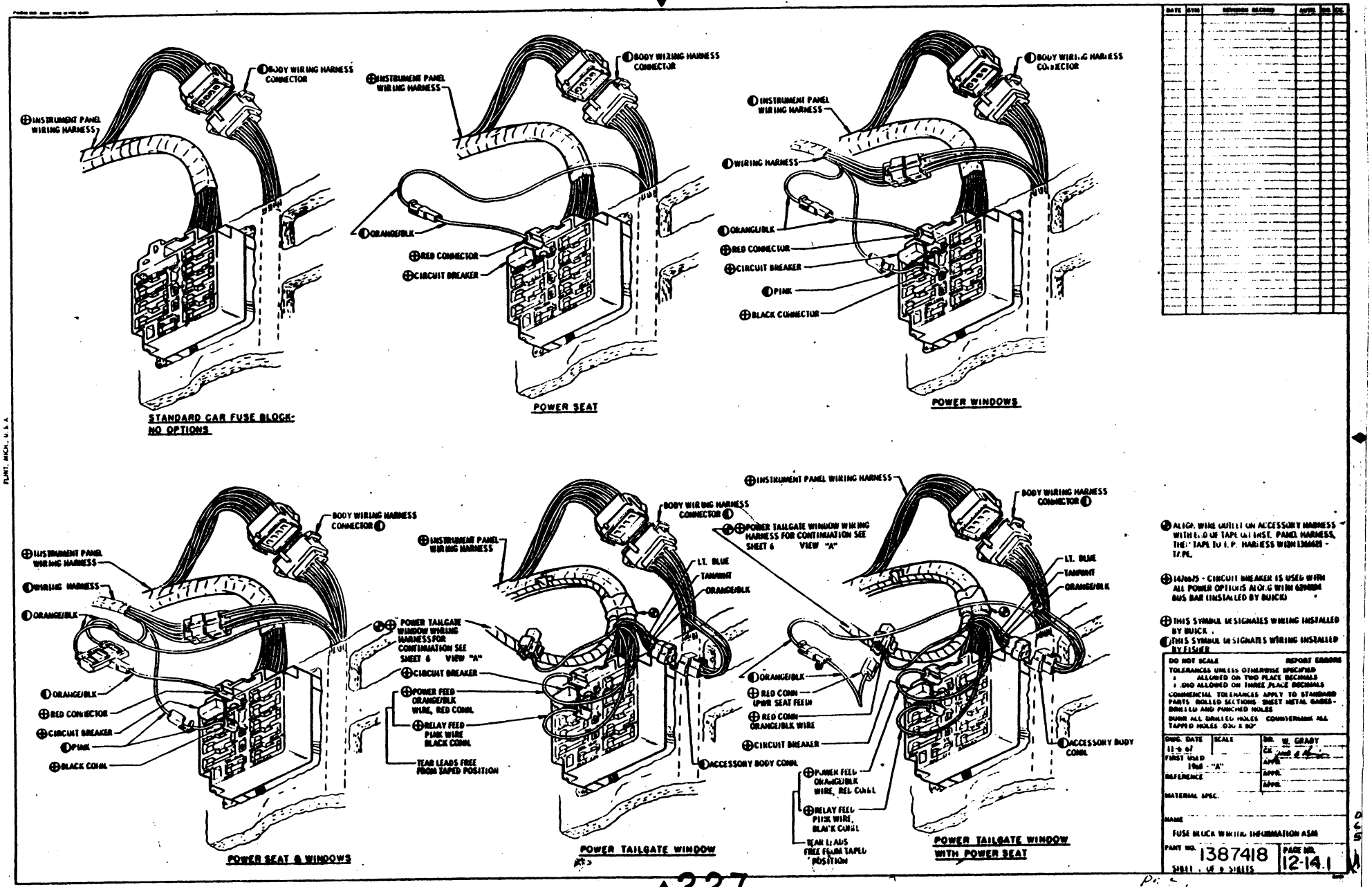

◐ALIGN WIRE OUTLET ON ACCESSORY HARNESS WITH LEAD TAPE ON INST. PANEL HARNESS, THEN TAPE TO I.P. HARNESS WITH 1386621 TAPE.

⊕1474675 - CIRCUIT BREAKER IS USED WITH ALL POWER OPTIONS ALONG WITH 6298804 BUS BAR (INSTALLED BY BUICK)

⊕THIS SYMBOL DESIGNATES WIRING INSTALLED BY BUICK.

◐THIS SYMBOL DESIGNATES WIRING INSTALLED BY FISHER

DO NOT SCALE — REPORT ERRORS

TOLERANCES UNLESS OTHERWISE SPECIFIED
± .010 ALLOWED ON TWO PLACE DECIMALS
± .030 ALLOWED ON THREE PLACE DECIMALS
COMMERCIAL TOLERANCES APPLY TO STANDARD PARTS ROLLED SECTIONS SHEET METAL GAGES - DRILLED AND PUNCHED HOLES
DRILL ALL DRILLED HOLES COUNTERSINK ALL TAPPED HOLES 82° X 90°

ENG. DATE 11-6-67	SCALE	DR. W. GRADY
FIRST USED 1968 "A"		CK. APPR.
REFERENCE		APPR.
MATERIAL SPEC.		APPR.

NAME: FUSE BLOCK WIRING INFORMATION ASM

PART NO. 1387418 | PAGE NO. 12-14.1

SHEET 1 OF 6 SHEETS

DAVE GRAHAM INC. - 2015
ALL RIGHTS RESERVED

DAVE GRAHAM INC. - 2015
ALL RIGHTS RESERVED

BUICK MOTOR DIVISION
GENERAL MOTORS CORPORATION
FLINT, MICH., U.S.A.

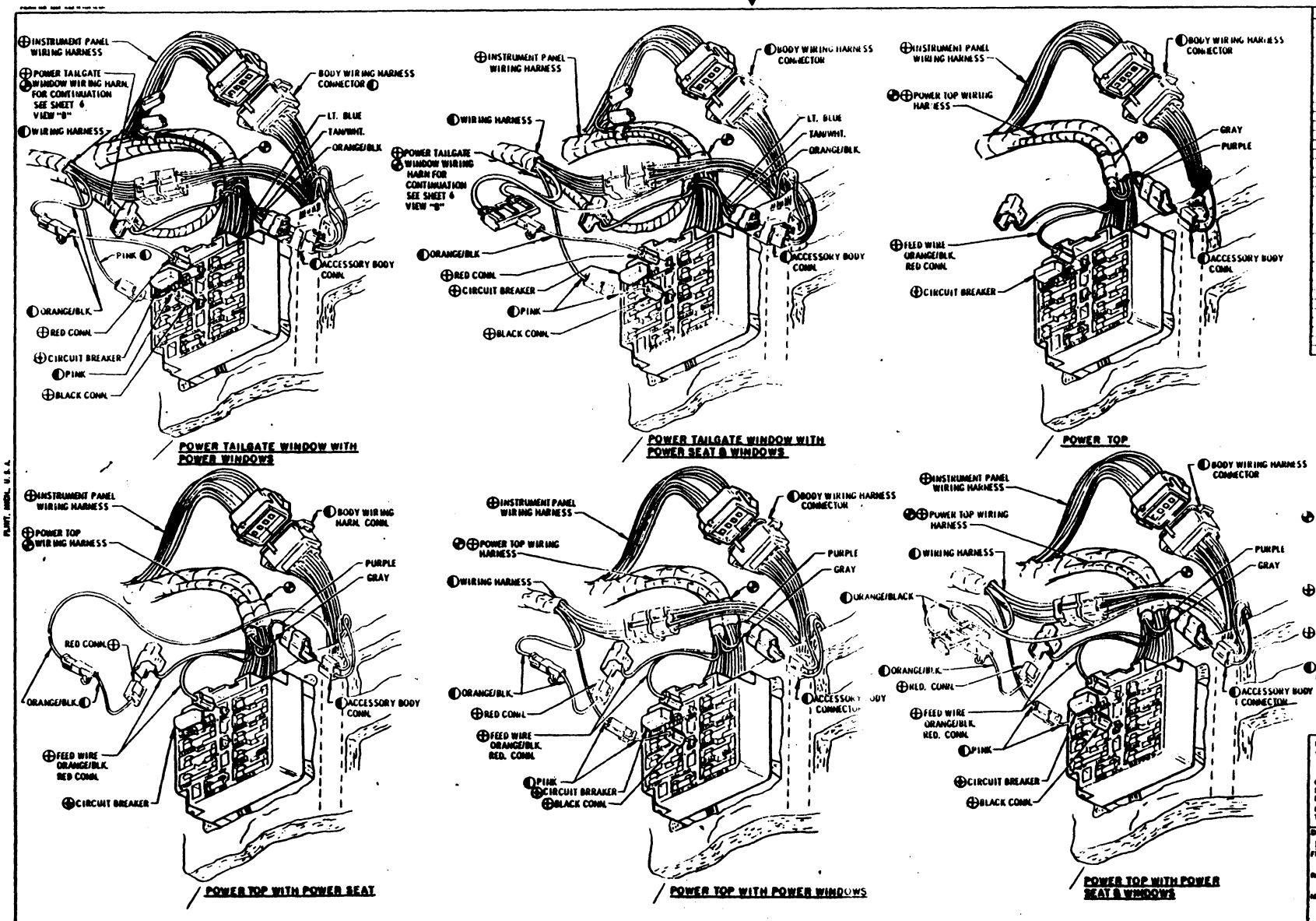

DATE	SYM	REVISION RECORD	AUTH.	DR	CK

ALIGN END OF TAPING ON ACCESSORY HARNESS OR WIRE OUTLET, WHICH EVER IS SHOWN IN VIEW, WITH END OF INST. PANEL HARNESS TAPE, THEN TAPE TO I.P. HARNESS WITH 136[illegible] - TAPE.

14[illegible] - CIRCUIT BREAKER IS USED WITH ALL POWER OPTIONS ALONG WITH 6[illegible] BUS BAR (INSTALLED BY BUICK)

THIS SYMBOL DESIGNATES WIRING INSTALLED BY BUICK.

THIS SYMBOL DESIGNATES WIRING INSTALLED BY FISHER.

DO NOT SCALE — REPORT ERRORS
TOLERANCES UNLESS OTHERWISE SPECIFIED
± ALLOWED ON TWO PLACE DECIMALS
± .010 ALLOWED ON THREE PLACE DECIMALS
COMMERCIAL TOLERANCES APPLY TO STANDARD PARTS - ROLLED SECTIONS - SHEET METAL GAGES - DRILLED AND PUNCHED HOLES.
BURN ALL DRILLED HOLES. COUNTERSINK ALL TAPPED HOLES .030 X 90°.

DWG DATE	SCALE	DR. W. MEADE
11-4-47		CK.
FIRST USED		APPR.
.96 - "A"		APPR.
REFERENCE		APPR.
MATERIAL SPEC.		

NAME: FUSE BLOCK WIRING INFORMATION ASM

PART NO. 1387418 — SHEET 2 OF 6 SHEETS — PAGE NO. 12-14.2

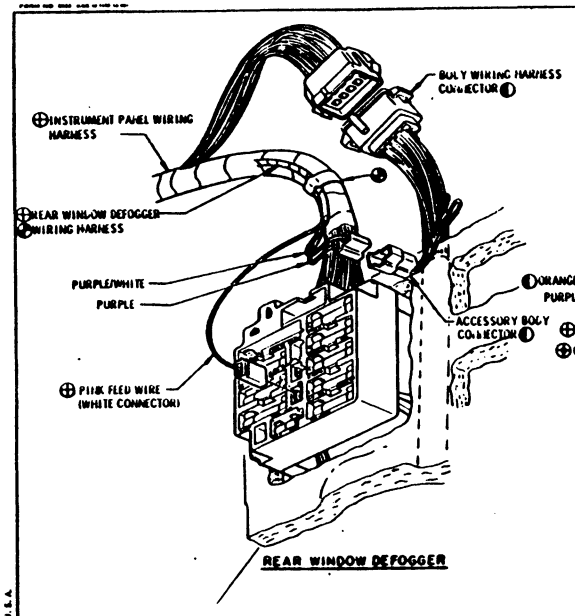

REAR WINDOW DEFOGGER

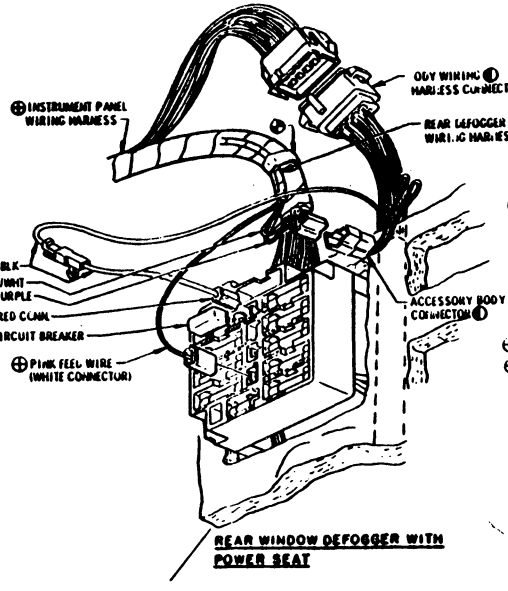

REAR WINDOW DEFOGGER WITH POWER SEAT

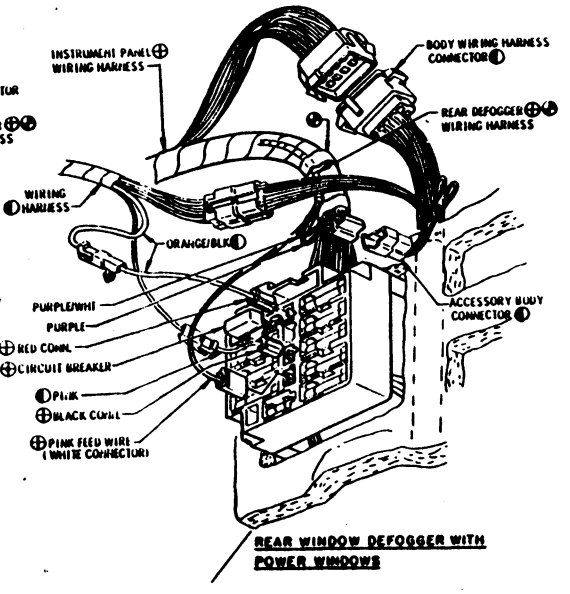

REAR WINDOW DEFOGGER WITH POWER WINDOWS

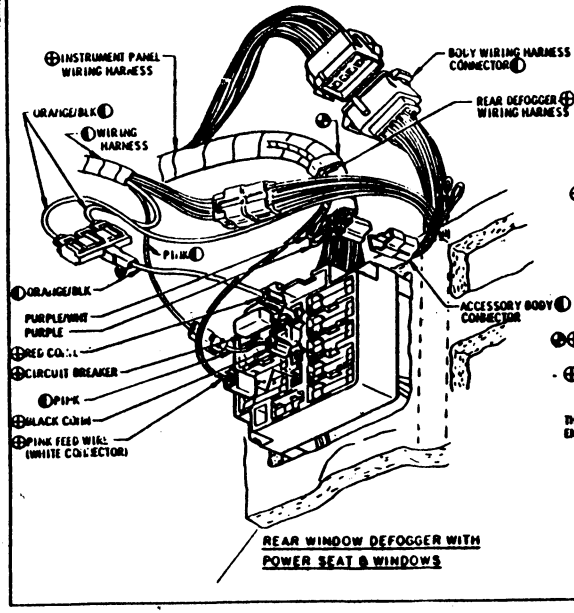

REAR WINDOW DEFOGGER WITH POWER SEAT & WINDOWS

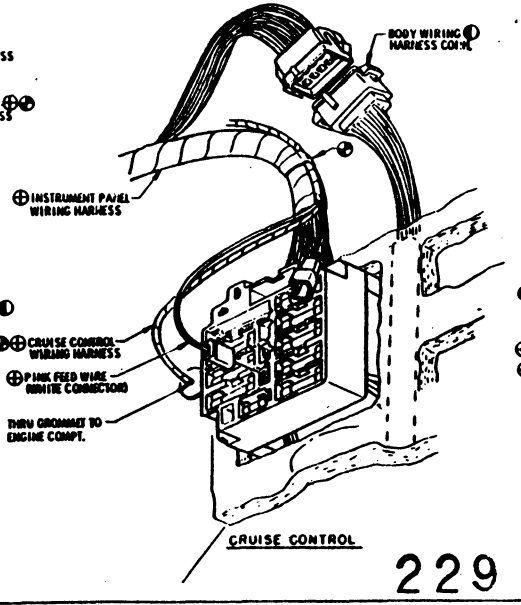

CRUISE CONTROL

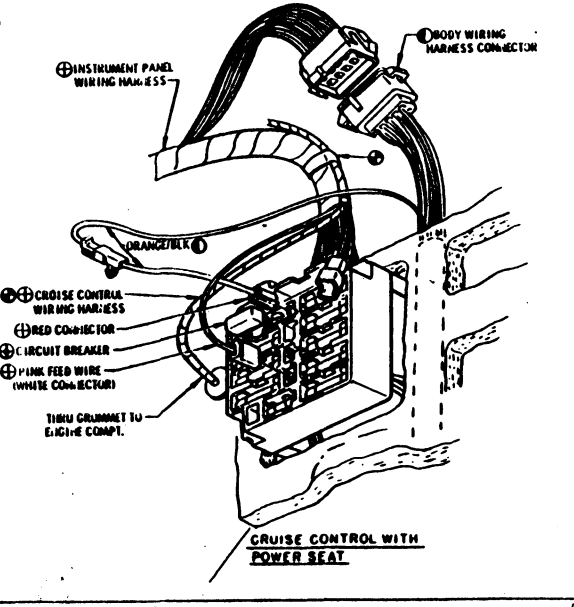

CRUISE CONTROL WITH POWER SEAT

DATE	SYM	REVISION RECORD	APPR.	DR.	CK.

⊕ALIGN END OF TAPING ON ACCESSORY HARNESS OR WIRE OUTLET, WHICH EVER IS SHOWN IN VIEW, WITH END OF INST. PANEL HARNESS TAPE, THEN TAPE TO I. P. HARNESS WITH 1366021 - TAPE.

⊕1476675 - CIRCUIT BREAKER IS USED WITH ALL POWER OPTIONS ALONG WITH 6294804 BUS BAR (INSTALLED BY BUICK)

⊕THIS SYMBOL DESIGNATES WIRING INSTALLED BY BUICK

◐THIS SYMBOL DESIGNATES WIRING INSTALLED BY FISHER.

DO NOT SCALE — REPORT ERRORS
TOLERANCES UNLESS OTHERWISE SPECIFIED
± ALLOWED ON TWO PLACE DECIMALS
± .010 ALLOWED ON THREE PLACE DECIMALS
COMMERCIAL TOLERANCES APPLY TO STANDARD PARTS - ROLLED SECTIONS - SHEET METAL GAGES - DRILLED AND PUNCHED HOLES.
DEBUR ALL DRILLED HOLES COUNTERBORE ALL TAPPED HOLES .030 X 82°.

DWG. DATE	SCALE	DR. M. MEADE
1-27-67		CK.
FIRST USED 1968 - A		APPR.
REFERENCE		APPR.
		APPR.

NAME
FUSE BLOCK WIRING INFORMATION ASM

PART NO. 1387418 | PAGE NO. 12-14.3
SHEET 1 OF 6 SHEETS

GENERAL MOTORS CORPORATION
FLINT, MICH., U.S.A.

DAVE GRAHAM INC. - 2015
ALL RIGHTS RESERVED

DAVE GRAHAM INC. - 2015
ALL RIGHTS RESERVED

BUICK MOTOR DIVISION
GENERAL MOTORS CORPORATION
FLINT, MICH., U.S.A.

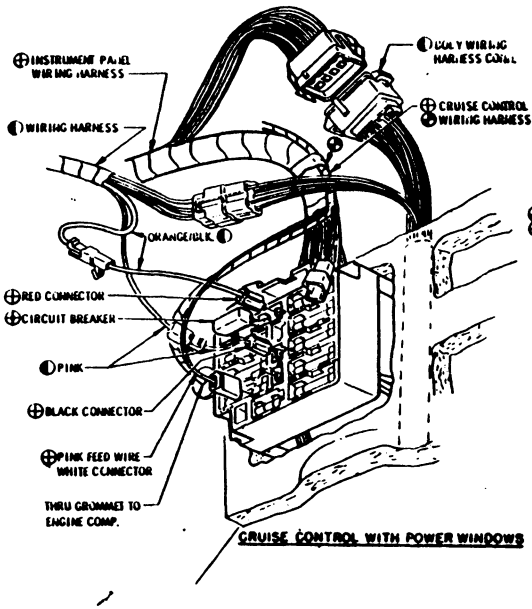

CRUISE CONTROL WITH POWER WINDOWS

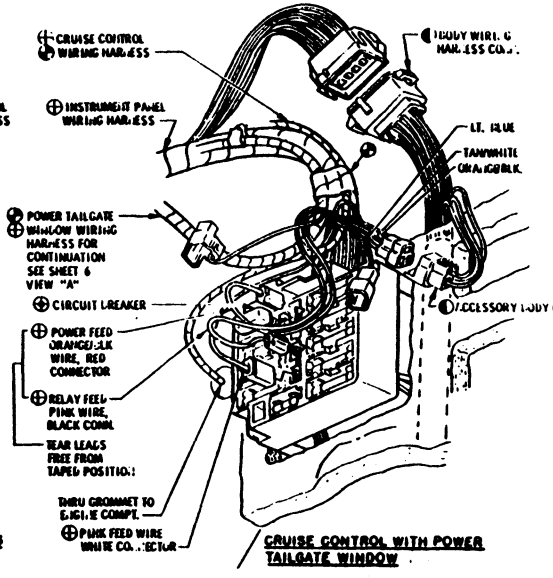

CRUISE CONTROL WITH POWER TAILGATE WINDOW

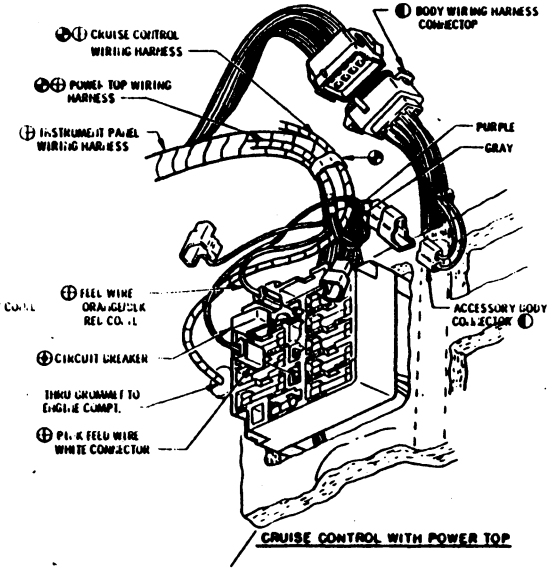

CRUISE CONTROL WITH POWER TOP

DATE	SYM.	REVISION RECORD	AUTH.		

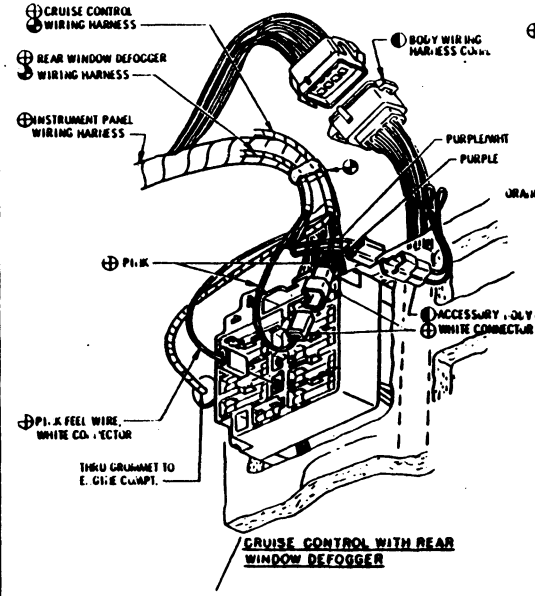

CRUISE CONTROL WITH REAR WINDOW DEFOGGER

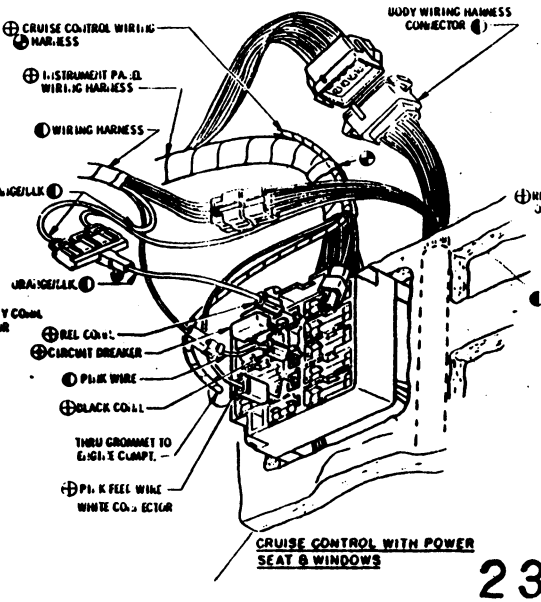

CRUISE CONTROL WITH POWER SEAT & WINDOWS

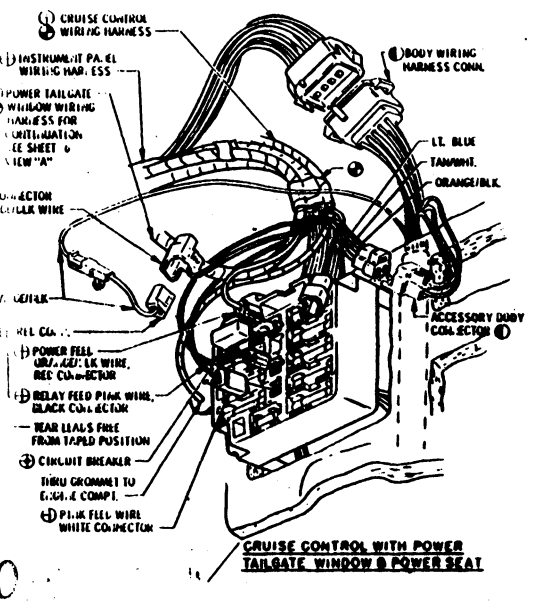

CRUISE CONTROL WITH POWER TAILGATE WINDOW & POWER SEAT

- ALIGN END OF TAPING ON ACCESSORY HARNESS OR WIRE OUTLET, WHICHEVER IS SHOWN IN VIEW, WITH END OF INST. PANEL HARNESS TAPE, THEN TAPE TO I.P. HARNESS WITH 1366621 - TAPE
- 1476675 - CIRCUIT BREAKER IS USED WITH ALL POWER OPTIONS ALONG WITH 6294004 BUS BAR (INSTALLED BY BUICK)
- THIS SYMBOL DESIGNATES WIRING INSTALLED BY BUICK
- THIS SYMBOL DESIGNATES WIRING INSTALLED BY FISHER

DO NOT SCALE — REPORT ERRORS
TOLERANCES UNLESS OTHERWISE SPECIFIED
.X ALLOWED ON TWO PLACE DECIMALS
.XXX ALLOWED ON THREE PLACE DECIMALS
COMMERCIAL TOLERANCES APPLY TO STANDARD PARTS - ROLLED SECTIONS - SHEET METAL GAGES - DRILLED AND PUNCHED HOLES
DEBUR ALL DRILLED HOLES. COUNTERSINK ALL TAPPED HOLES .030 X 90°.

DWG DATE	SCALE	DR. W. CRADY
11-9-67		CK.
FIRST USED 1968 "A"		APPR.
REFERENCE		APPR.
MATERIAL SPEC		APPR.

NAME
FUSE BLOCK WIRING INFORMATION ASM

PART NO. 1387418 SHEET 4 OF 6 SHEETS | PAGE NO. 12-14.4

230

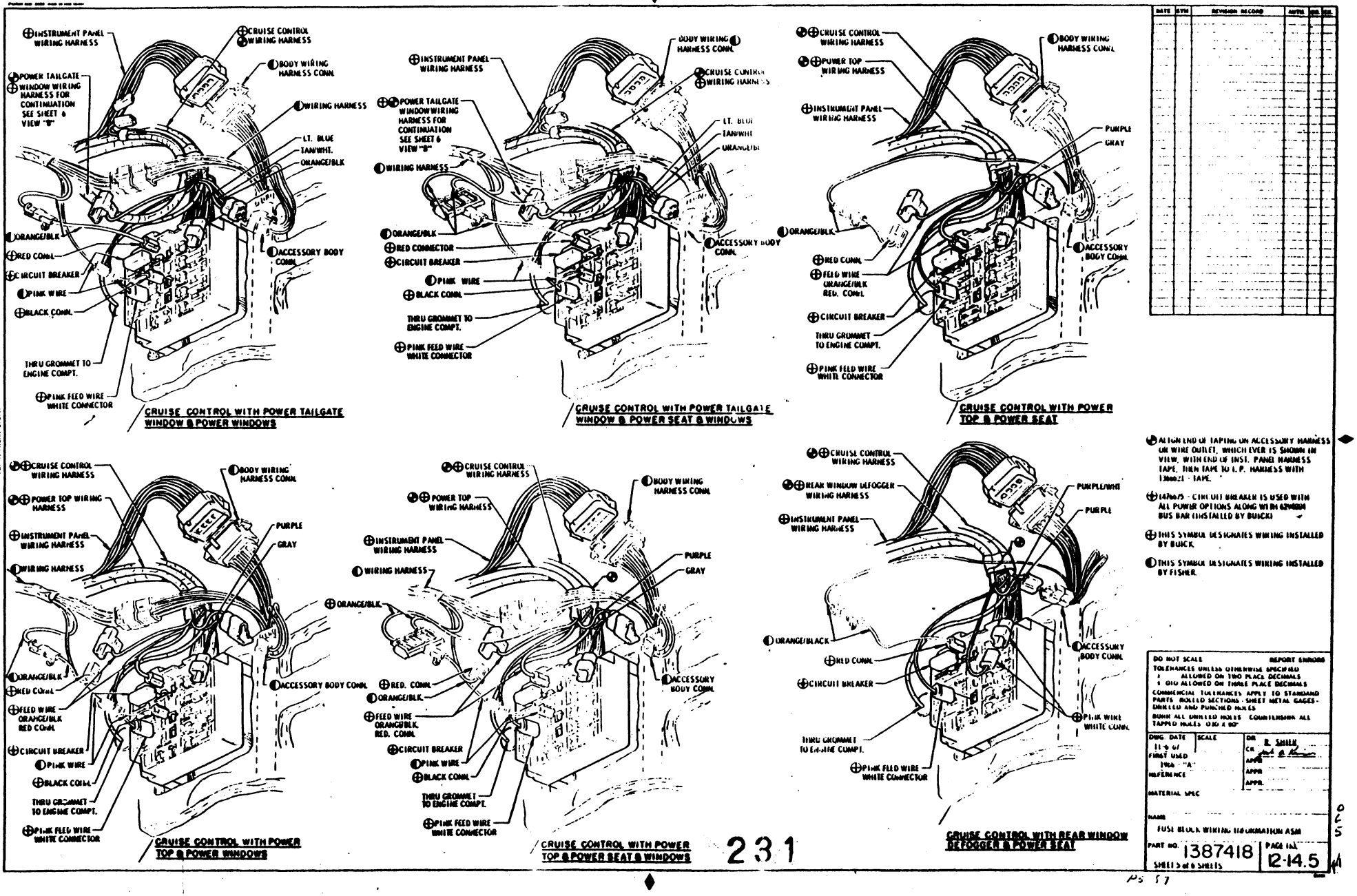

DAVE GRAHAM INC. - 2015
ALL RIGHTS RESERVED

DAVE GRAHAM INC. - 2015
ALL RIGHTS RESERVED

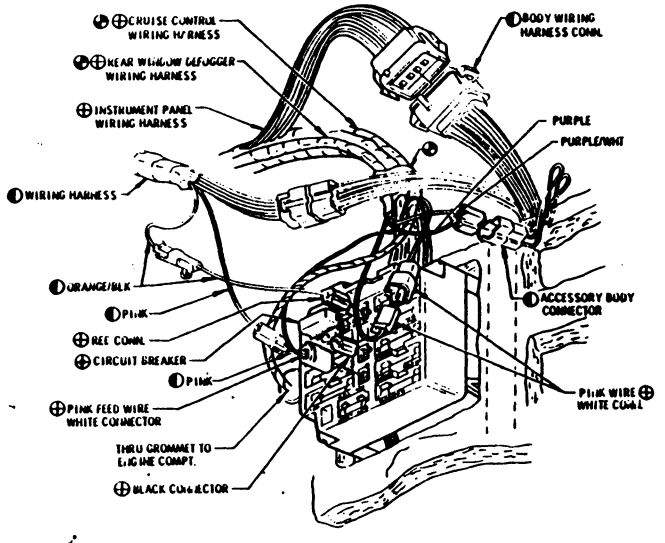

CRUISE CONTROL WITH REAR WINDOW DEFOGGER & POWER WINDOWS

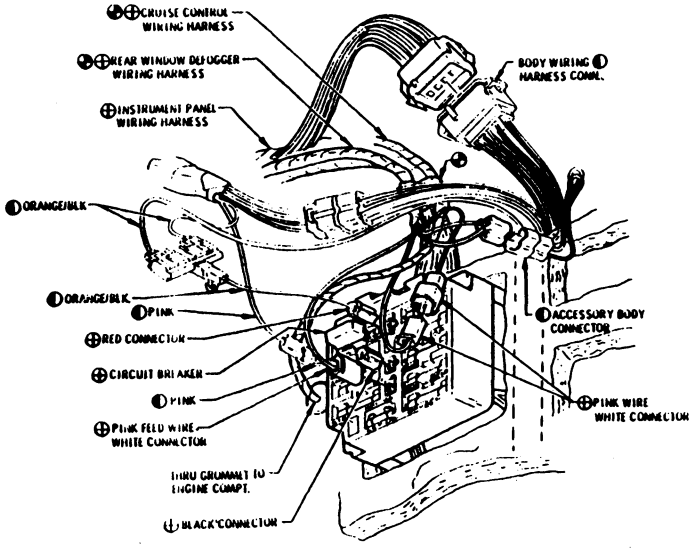

CRUISE CONTROL WITH REAR WINDOW DEFOGGER & POWER SEAT & WINDOWS

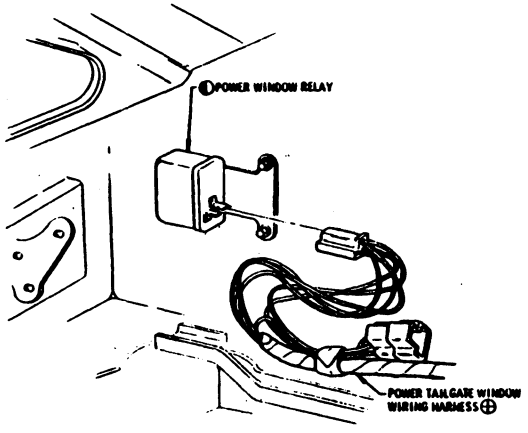

VIEW 'A' OF POWER WINDOW RELAY

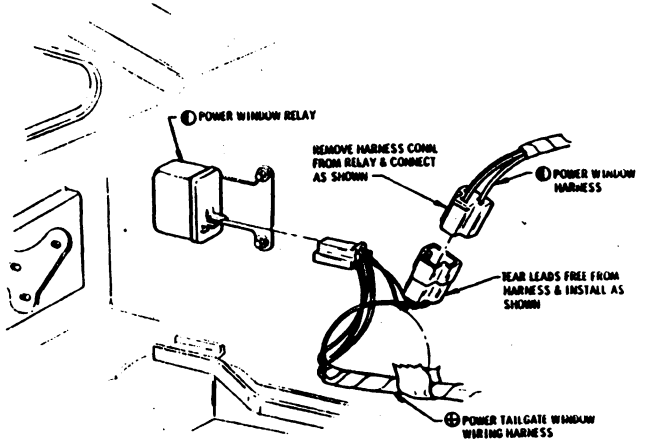

VIEW 'B' OF POWER WINDOW RELAY

DATE	SYM	REVISION RECORD	AUTH	DR	CK

ALIGN END OF TAPING ON ACCESSORY HARNESS OR WIRE OUTLET, WHICH EVER IS SHOWN IN VIEW, WITH END OF INST. PANEL HARNESS TAPE, THEN TAPE TO INST. PANEL HARNESS WITH 1366621 - TAPE.

1476675 - CIRCUIT BREAKER IS USED WITH ALL POWER OPTIONS ALONG WITH 6294804 BUS BAR (INSTALLED BY BUICK)

THIS SYMBOL DESIGNATES WIRING INSTALLED BY BUICK.

THIS SYMBOL DESIGNATES WIRING INSTALLED BY FISHER.

DO NOT SCALE — REPORT ERRORS
TOLERANCES UNLESS OTHERWISE SPECIFIED
± ALLOWED ON TWO PLACE DECIMALS
± .010 ALLOWED ON THREE PLACE DECIMALS
COMMERCIAL TOLERANCES APPLY TO STANDARD PARTS - ROLLED SECTIONS - SHEET METAL GAGES - DRILLED AND PUNCHED HOLES.
BURR ALL DRILLED HOLES COUNTERSINK ALL TAPPED HOLES .030 X 90°.

DWG DATE	SCALE	DR. W. MEADE
11-6-67		CK.
FIRST USED 1968 'A'		APPR.
REFERENCE		APPR.
		APPR.
MATERIAL SPEC		

NAME
FUSE BLOCK WIRING INFORMATION ASM

PART NO. 1387418 — PAGE NO. 12-14.6
SHEET 6 OF 6 SHEETS

BUICK MOTOR DIVISION
GENERAL MOTORS CORPORATION
FLINT, MICH., U.S.A.

	PAGES
Front Bumper Installation	14-2.1
Rear Bumper & Back-Up Lamp Installations (Except Wagons) (2 pages)	14-3.1 14-3.2
Rear Bumper & Back-Up Lamp Installation (Wagons)	14-4.1

PAGES

Revised 8-1-67
PART NUMBER- 1383770
PAGE NUMBER- 14-1.0

DAVE GRAHAM INC. - 2015
ALL RIGHTS RESERVED

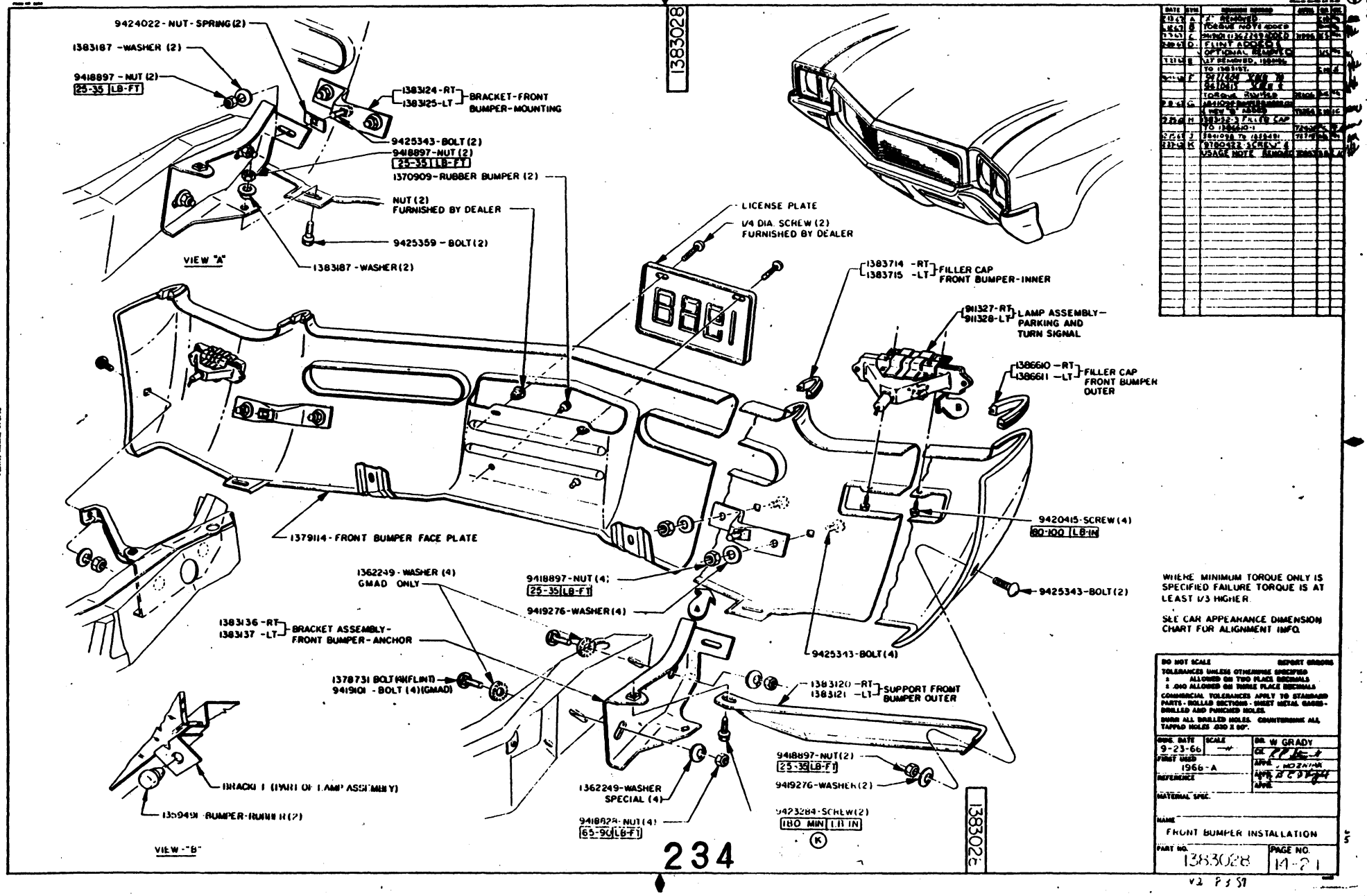

DAVE GRAHAM INC. - 2015
ALL RIGHTS RESERVED

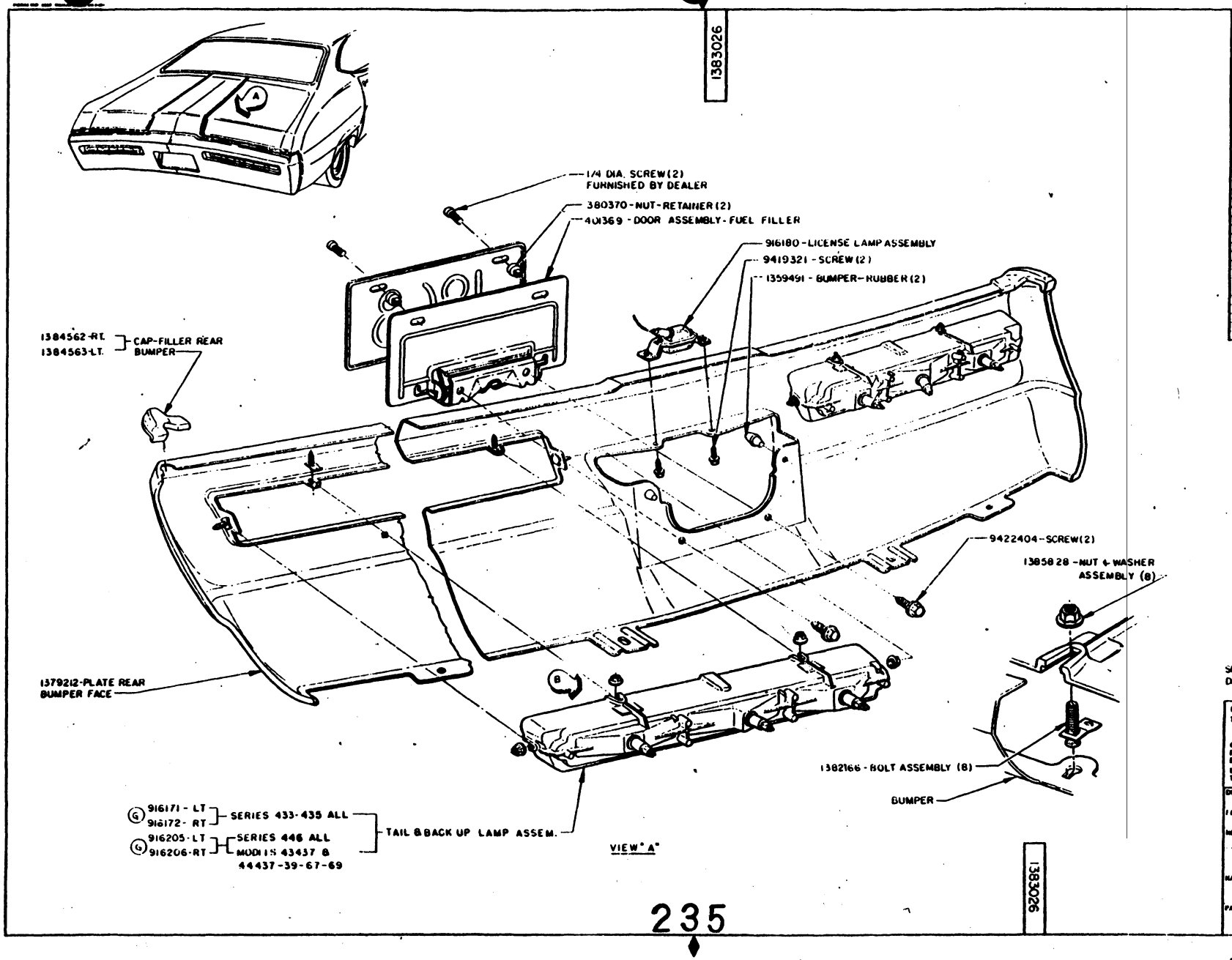

DATE	SYM	REVISION RECORD	APPR		
1-24-67	A	X REMOVED.			
6-8-67	B	1373962; 1376247; [illegible]			
		1371[illegible]; 1389910 & 1371[illegible] REMOVED.			
		400[illegible] ADDED.			
4-11-67	C	CAPS REVISED.			
5-3-67	D	9422247 TO 9419321	[illegible]		
[illegible]	E	400[illegible] TO 401369	[illegible]		
[illegible]	F	9416218 TO 1385828	[illegible]		
[illegible]	G	435 REMOVED FROM [illegible]			
		ADDED TO [illegible]	[illegible]		

SEE CAR APPEARANCE & TRIM HEIGHT DRAWING FOR ALIGNMENT INFORMATION

DO NOT SCALE — REPORT ERRORS

TOLERANCES UNLESS OTHERWISE SPECIFIED
± ALLOWED ON TWO PLACE DECIMALS
± .010 ALLOWED ON THREE PLACE DECIMALS

COMMERCIAL TOLERANCES APPLY TO STANDARD PARTS - ROLLED SECTIONS - SHEET METAL GAGES - DRILLED AND PUNCHED HOLES.

BURR ALL DRILLED HOLES. COUNTERSINK ALL TAPPED HOLES .030 X 80°.

DWG. DATE	SCALE	DR. CHAS. MANOS
9-8-66		CK. R. LEVANDER
FIRST USED 1968-A		APPR. [signature]
REFERENCE		APPR.
		APPR.

ALL LESS STATION WAGONS

NAME: REAR BUMPER INSTALLATION

PART NO. 1383026 — SHEET 1 OF 2 SHEETS — PAGE NO. 14-3.1

DAVE GRAHAM INC. - 2015
ALL RIGHTS RESERVED

DAVE GRAHAM INC. - 2015
ALL RIGHTS RESERVED

BUICK MOTOR DIVISION
GENERAL MOTORS CORPORATION
FLINT, MICH., U.S.A.

1383026

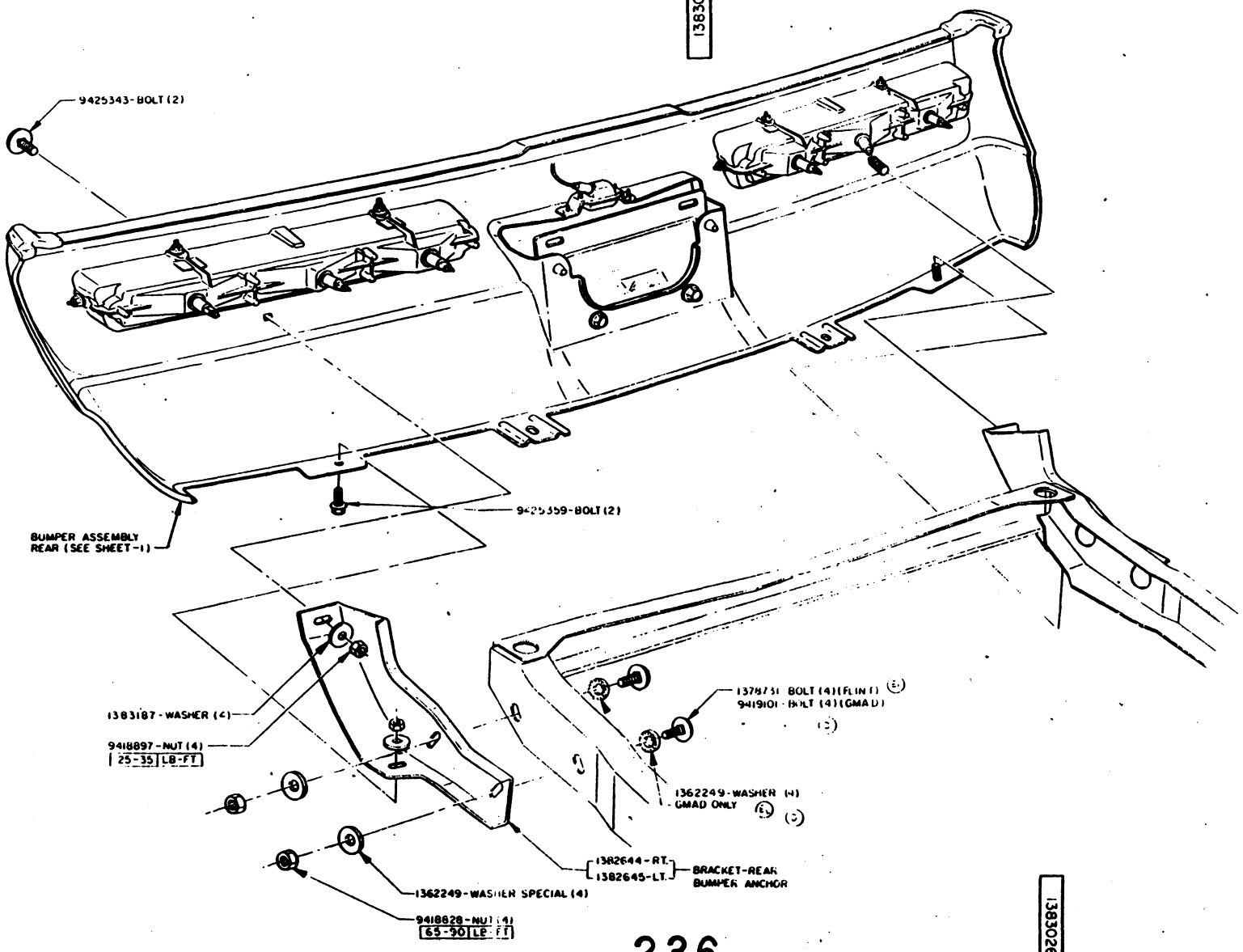

DATE	SYM.	REVISION RECORD	AUTH.	DR	CK
1-24-67	A	X REMOVED.			
4-8-67	B	FUEL FILLER DOOR REVISED			
4-17-67	C	CAPS REVISED.			
7-7-67	D	9419101 & 1362249 ADDED			
7-26-67	E	FLINT ADDED			
		OPTIONAL REMOVED			

DO NOT SCALE — REPORT ERRORS
TOLERANCES UNLESS OTHERWISE SPECIFIED
± ALLOWED ON TWO PLACE DECIMALS
± .010 ALLOWED ON THREE PLACE DECIMALS
COMMERCIAL TOLERANCES APPLY TO STANDARD PARTS - ROLLED SECTIONS - SHEET METAL GAGES - DRILLED AND PUNCHED HOLES.
BURR ALL DRILLED HOLES. COUNTERSINK ALL TAPPED HOLES .030 X 90°.

DWG. DATE 9-8-66	SCALE	DR J. KRIEGER
FIRST USED 1968 A		CK R. LEVANDER
REFERENCE		APPR.
		APPR.
		APPR.

ALL LESS STATION WAGONS

NAME: REAR BUMPER INSTALLATION

PART NO. 1383026 — SHEET 2 OF 2 SHEETS — PAGE NO 14 32

1383026

236

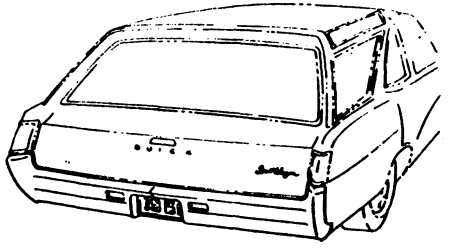

1383203

1384322
1384323 FILLER CAP (2)

916614 - BACK UP LAMP ASSEMBLY

9422046 - SCREW (FLINT)
9420721 - SCREW (GMAD) (E)

380370 - NUT - RETAINER (2)

LICENSE PLATE & FRAME

916180 - LAMP ASSEMBLY - LICENSE

1382040 - PLATE - CAR REAR BUMPER FACE

1/4 DIA SCREW (2) FURNISHED BY DEALER

SECTION A-A

1174953 - BUMPER (2)

9419892 - WASHER (2) (GMAD ONLY) (L)

1380205 - SCREW (2) (FLINT)
9419727 - SCREW (2) (GMAD) (L)

9419321 - SCREW (2)

273513 - SCREW (4)

3841098 - RUBBER BUMPER (2)

401569 - BAFFLE (E)

9190909 - NUT (FLINT)
9424837 - NUT (GMAD) (E)

9425343 - BOLT (4)

398998 - PAD - REAR BUMPER BRACKET (2)

1362249 - WASHER (4)

1383187 - WASHER (4)

9418828 - NUT (4)
65-90 LB FT

9418897 - NUT (4)
25-35 LB FT

1378731 - BOLT (4) (FLINT)
9419101 - BOLT (4) (GMAD)

398330 - RT
398331 - LT
BRACKET - REAR BUMPER TO FRAME

1362219 - WASHER (4) GMAD ONLY

SEE CAR APPEARANCE DIMENSION CHART FOR ALIGNMENT INFORMATION

DATE	SYM	REVISION RECORD
8-30-66	A	[illegible]
9-28-66	B	[illegible]
1-3-67	C	FLINT ADDED ? OPTIONAL REMOVED [illegible] ATTACHING PARTS ADDED
11-28-67	D	[illegible]
1-2-68	E	[illegible]

DO NOT SCALE DRAWING — REPORT ERRORS
TOLERANCES UNLESS OTHERWISE SPECIFIED
X ALLOWED ON TWO PLACE DECIMALS
.XXX ALLOWED ON THREE PLACE DECIMALS
COMMERCIAL TOLERANCES APPLY TO STANDARD PARTS - ROLLED SECTIONS - SHEET METAL GAGES - DRILLED AND PUNCHED HOLES.
BURR ALL DRILLED HOLES. COUNTERSINK ALL TAPPED HOLES 0.10 X 90°.

DWG. DATE 9-28-66	DR. CRAFT
FIRST USED 1968 - A	CH. H. LEVANDER
REFERENCE	APPR.
MATERIAL SPEC.	APPR.
	APPR.

NAME REAR BUMPER INSTALLATION (STATION WAGON ONLY)

PART NO. 1383203 PAGE NO. 14-4.1

1383203

237

BUICK MOTOR DIVISION
GENERAL MOTORS CORPORATION
FLINT, MICH., U.S.A.

- 3 5 15

DAVE GRAHAM INC. - 2015
ALL RIGHTS RESERVED

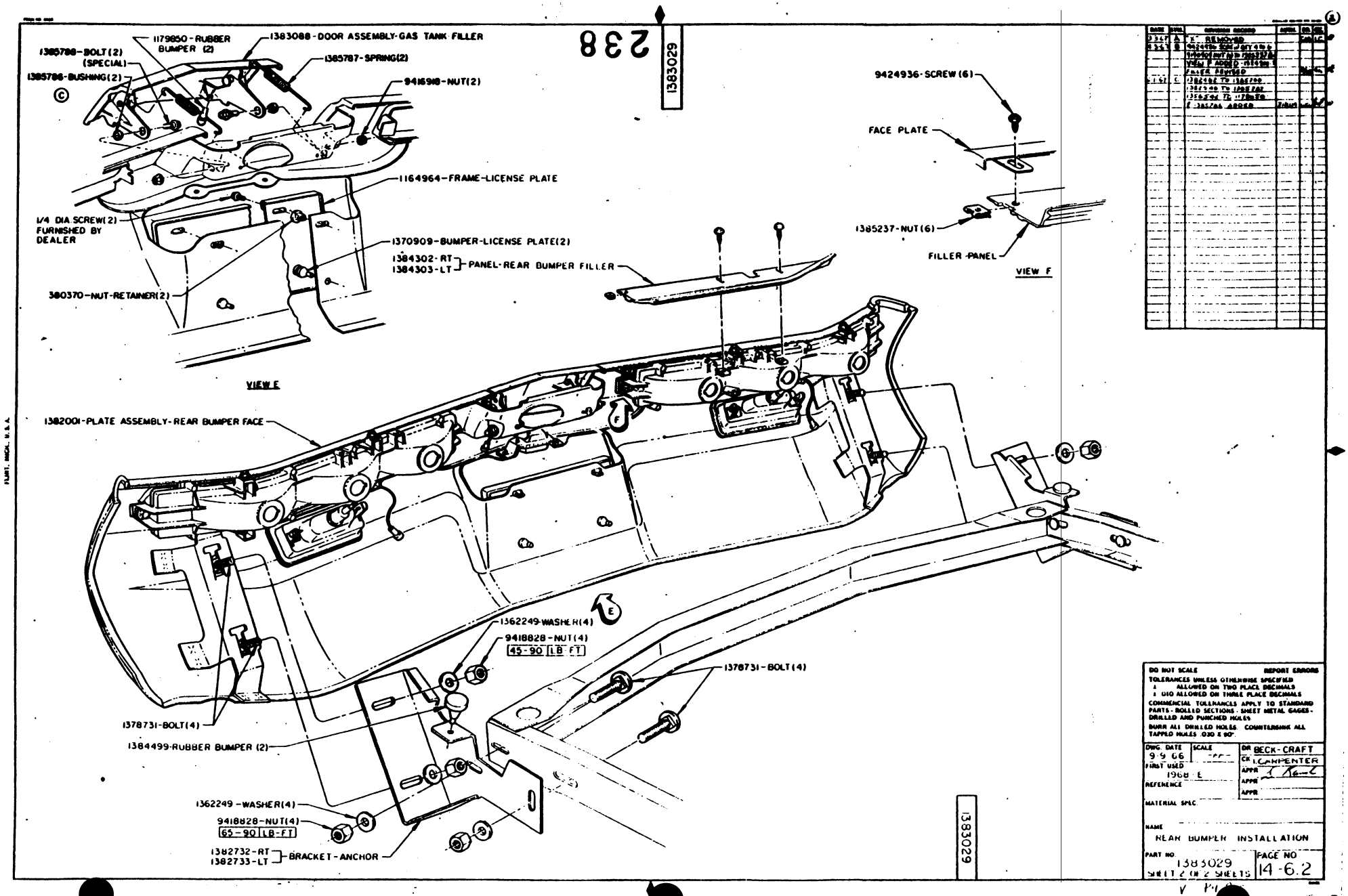

DAVE GRAHAM INC. - 2015
ALL RIGHTS RESERVED

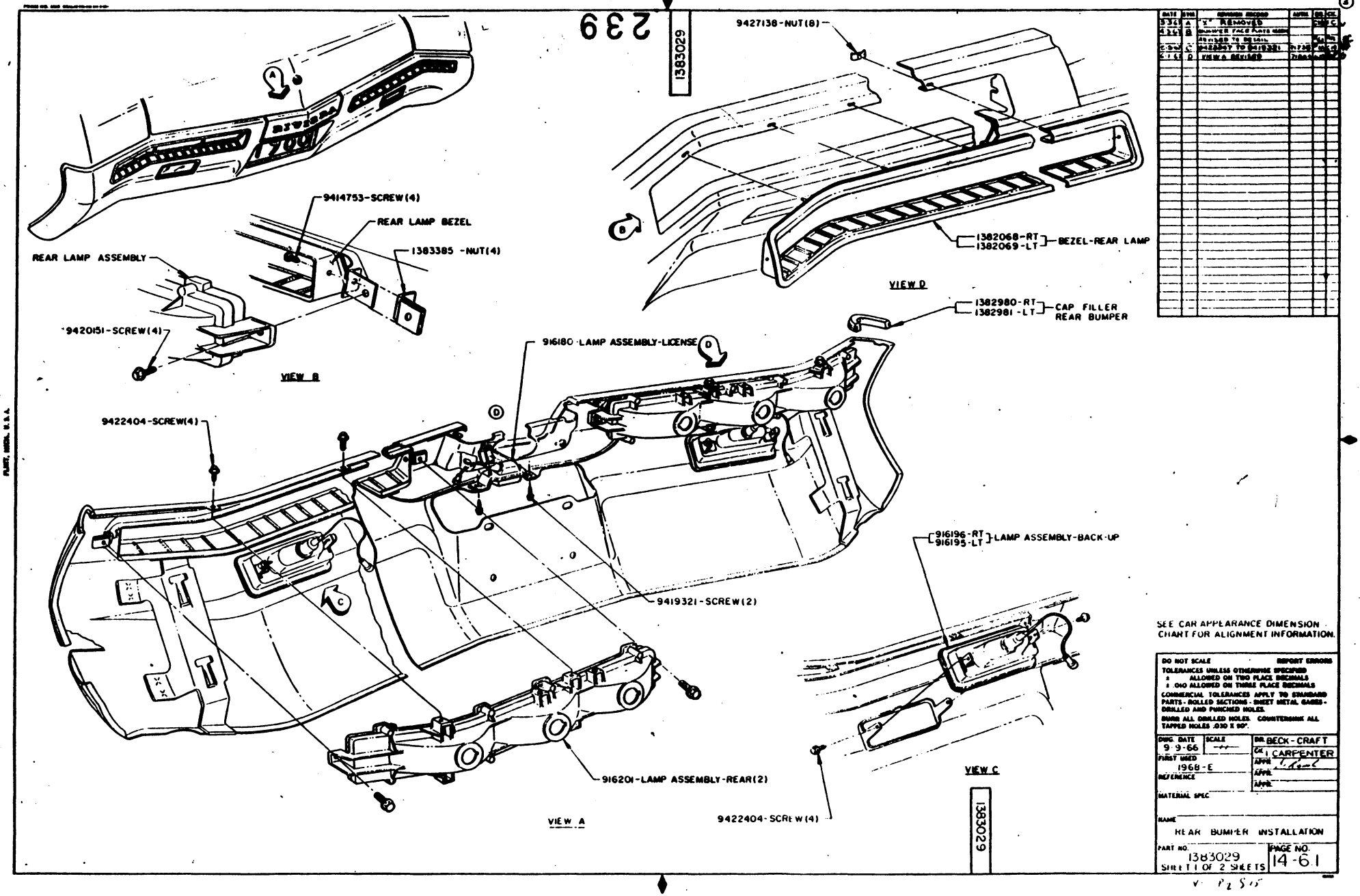

DAVE GRAHAM INC. - 2015
ALL RIGHTS RESERVED